200 MPH AIR CONDITIONING

SINCE Vintage Air 1976

1968-76 CORVETTE

GEN IV w/o FACTORY AIR

561174-PCZ

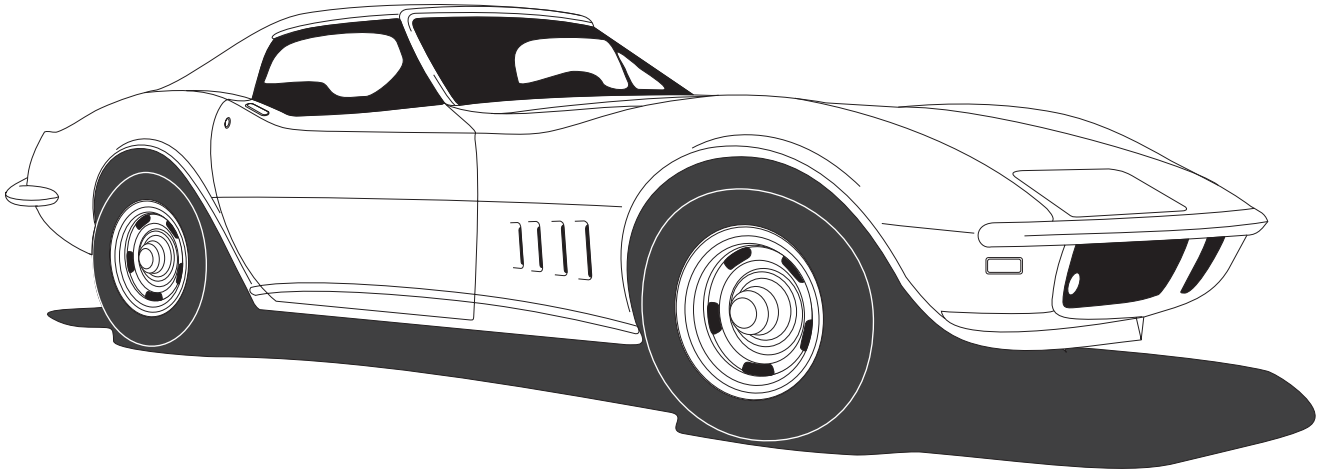

18865 GOLL ST. - SAN ANTONIO, TX. - 78266 ph.210-654-7171 - fax 210-654-3113

Table of Contents

PAGES

EVAPORATOR KIT PACKING LIST

EVAPORATOR KIT
561174-PCZ

No.	QTY.	PART No.	DESCRIPTION
1.	1	761174-VCE	1968-76 CORVETTE w/o AC EVAP. SUBCASE
2.	1	781174-PCN	1968-76 CORVETTE w/o AC ACC. KIT

***** BEFORE BEGINNING INSTALLATION OPEN ALL PACKAGES AND CHECK CONTENTS OF SHIPMENT. PLEASE REPORT ANY SHORTAGES DIRECTLY TO VINTAGE AIR WITHIN 15 DAYS. AFTER 15 DAYS, VINTAGE AIR WILL NOT BE RESPONSIBLE FOR MISSING OR DAMAGED ITEMS.***

①

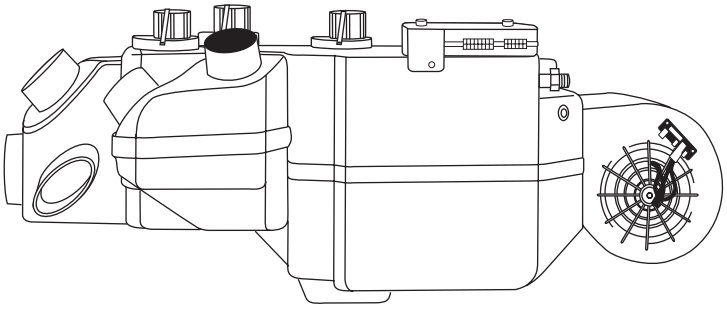

1968-76 CORVETTE
w/o AC EVAP. SUB CASE
761174-VCE

②

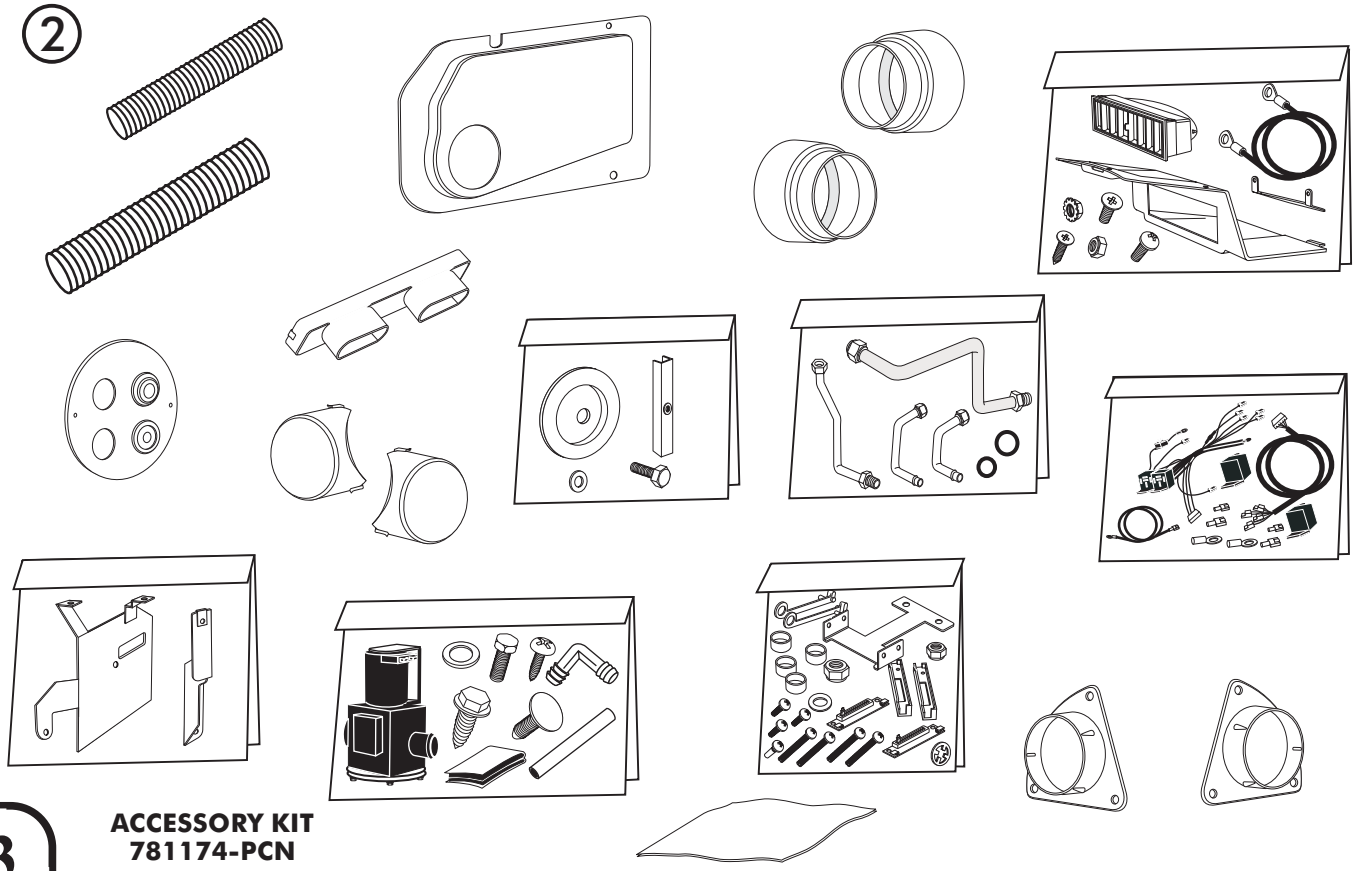

ACCESSORY KIT
781174-PCN

1968-76 CORVETTE

GEN IV

IMPORTANT NOTICE-PLEASE READ

FOR MAXIMUM SYSTEM PERFORMANCE VINTAGE AIR RECOMMENDS THE FOLLOWING:

*18" HEAVY DUTY FAN
* FAN SHROUD
*16" SPAL AUXILIARY CONDENSER FAN PACKAGE (PART # 302686-CCA)

THIS KIT DOES NOT CONTAIN HEATER HOSE. YOU MUST PURCHASE 8 FEET OF 5/8" DIA. HEATER HOSE FROM VINTAGE AIR(31800-VUD) OR FROM YOU LOCAL PARTS RETAILER

SAFETY SWITCHES:

YOUR VINTAGE AIR SYSTEM IS EQUIPPED WITH A BINARY PRESSURE SAFETY SWITCH. A BINARY SWITCH (11078-VUS) DISENGAGES THE COMPRESSOR CLUTCH IN CASE OF EXTREME LOW PRESSURE CONDITION (REFRIGERANT LOSS) OR EXCESSIVELY HIGH HEAD PRESSURE (406 PSI), TO PREVENT COMPRESSOR DAMAGE OR HOSE RUPTURE. A TRINARY SWITCH (11076-VUS) COMBINES HI/LO PRESSURE PROTECTION WITH AN ELECTRIC FAN OPERATION SIGNAL AT 254 PSI, AND MAY BE SUBSTITUTED FOR USE WITH ELECTRIC CONDENSER FANS. COMPRESSOR SAFETY SWITCHES ARE EXTREMELY IMPORTANT SINCE AN A/C SYSTEM RELIES ON REFRIGERANT TO CARRY LUBRICATION THROUGH THE SYSTEM.

SERVICE INFO:

EVACUATE THE SYSTEM FOR 35-45 MINUTES WITH SYSTEM COMPONENTS (DRIER, COMPRESSOR, EVAPORATOR AND CONDENSER) AT A TEMPERATURE OF AT LEAST 85° F. ON A COOL DAY THE COMPONENTS CAN BE HEATED WITH A HEAT GUN OR BY RUNNING THE ENGINE WITH THE HEATER ON BEFORE EVACUATING. LEAK CHECK AND CHARGE TO SPECIFICATIONS.

THE PROPER AMOUNT OF REFRIGERANT IS CRITICAL TO PROPER SYSTEM OPERATION. VINTAGE AIR RECOMMENDS OUR SYSTEMS BE CHARGED BY WEIGHT WITH A QUALITY CHARGING STATION OR SCALE.

REFRIGERANT CAPACITIES

134a SYSTEM

CHARGE WITH 1.8 lb. (1lb. 12oz) OF REFRIGERANT

R-12 SYSTEM

CHARGE WITH 2.0 lb. OF REFRIGERANT

LUBRICANT CAPACITIES

NEW COMPRESSOR - NO ADDITIONAL OIL NEEDED
USED COMPRESSOR - CONSULT VINTAGE AIR

IMPORTANT *WIRING* NOTICE-PLEASE READ

SOME VEHICLES MAY HAVE HAD SOME OR ALL OF THEIR RADIO INTERFERENCE CAPACITORS REMOVED. THERE SHOULD BE A CAPACITOR FOUND ON THE POSITIVE TERMINAL OF THE IGNITION COIL.

MOST ALTERNATORS HAVE A CAPACITOR INSTALLED INTERNALLY TO ELIMINATE WHAT IS CALLED 'WHINING' AS THE ENGINE IS REVVED. IF WHINING IS HEARD IN THE RADIO, OR JUST TO BE EXTRA CAUTIOUS, A RADIO INTERFERENCE CAPACITOR CAN BE ADDED TO THE BATTERY TERMINAL OF THE ALTERNATOR.

IT IS ALSO IMPORTANT THAT THE BATTERY LEAD IS IN GOOD SHAPE AND THAT THE GROUND LEADS ARE NOT COMPROMISED. THERE SHOULD BE A HEAVY GROUND FROM THE BATTERY TO THE ENGINE BLOCK, AND ADDITIONAL GROUNDS TO THE BODY AND TO THE CHASSIS.

IF THESE PRECAUTIONS ARE NOT OBSERVED, IT IS POSSIBLE FOR VOLTAGE SPIKES TO BE PRESENT ON THE BATTERY LEADS. THESE SPIKES COME FROM IGNITION SYSTEMS, CHARGING SYSTEMS, AND FROM TURNING SOME OF THE VEHICLE'S OTHER SYSTEMS ON AND OFF. MODERN COMPUTER OPERATED EQUIPMENT CAN BE SENSITIVE TO VOLTAGE SPIKES ON THEIR POWER LEADS, WHICH CAN CAUSE UNEXPECTED RESETS, STRANGE BEHAVIOR, AND MAY ALSO CAUSE PERMANENT DAMAGE.

VINTAGE AIR STRIVES TO HARDEN THEIR PRODUCTS AGAINST THESE TYPES OF ELECTRICAL NOISE, BUT THERE IS A POINT WHERE A VEHICLE'S ELECTRICAL SYSTEM CAN BE DEGRADED SO MUCH THAT NOTHING CAN HELP.

RADIO INTERFERENCE CAPACITORS SHOULD BE AVAILABLE AT MOST AUTO & TRUCK PARTS SUPPLIERS. THEY TYPICALLY ARE CYLINDRICAL IN SHAPE, A LITTLE OVER AN INCH LONG, A LITTLE OVER A HALF INCH IN DIAMETER, THEY HAVE A SINGLE LEAD COMING FROM ONE END OF THE CYLINDER WITH A TERMINAL ON THE END OF THE WIRE, AND THEY WILL HAVE A MOUNTING CLIP WHICH IS SCREWED INTO A GOOD GROUND ON THE VEHICLE. THE SPECIFIC VALUE OF THE CAPACITANCE IS NOT TOO SIGNIFICANT, IN COMPARISON TO IGNITION CAPACITORS THAT ARE MATCHED WITH THE COIL TO REDUCE PITTING OF THE POINTS.

- CARE MUST BE TAKEN WHEN INSTALLING THE COMPRESSOR LEAD, NOT TO SHORT IT TO GROUND. THE COMPRESSOR LEAD MUST NOT BE CONNECTED TO A CONDENSER FAN OR ANY OTHER AUXILIARY DEVICE. SHORTING TO GROUND OR CONNECTING TO A CONDENSER FAN OR ANY OTHER AUXILIARY DEVICE WILL CAUSE SEVERE DAMAGE TO THE ECU.
- WHEN INSTALLING GROUND LEADS ON GEN IV SYSTEMS, THE BLOWER CONTROL GROUND AND ECU GROUND MUST BE CONNECTED DIREECTLY TO THE NEGATIVE BATTERY POST.
- THE HEATER CONTROL VALVE IS A NORMALLY OPEN VALVE. IT MUST BE CONNECTED TO THE ECU TO BLOCK WATER FLOW IN AC MODE.

INSTALLATION INSTRUCTIONS FOR 1968-1976 CORVETTE

BEFORE STARTING THE AIR CONDITIONER INSTALLATION, CHECK FOR PROPER OPERATION OF ALL COMPONENTS (RADIO, LIGHTS, WIPERS, ETC.). STUDY THE INSTRUCTIONS, ILLUSTRATIONS AND DIAGRAMS. FOR EASE OF INSTALLATION CHECK OFF (☑) EACH PROCEDURE PRIOR TO MOVING ON TO THE NEXT STEP.

ENGINE COMPARTMENT

- ☐ DISCONNECT BATTERY
- ☐ REMOVE HOOD TO EASE INSTALLATION
- ☐ DRAIN RADIATOR
- ☐ REMOVE OEM BLOWER ASSEMBLY AND COVER
- ☐ REMOVE OEM HEATER CORE AND COVER

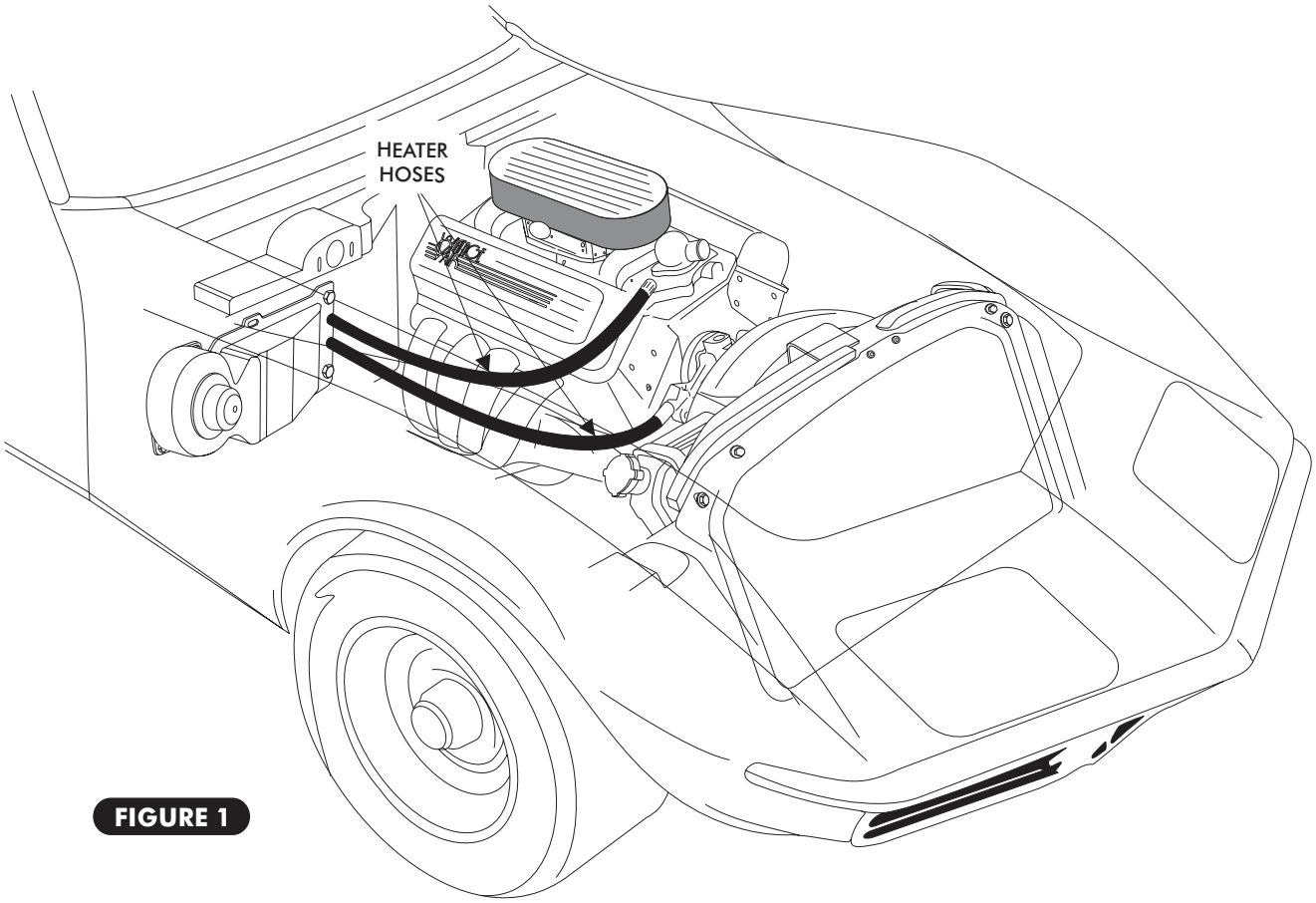

FIGURE 1

PASSENGER COMPARTMENT

- ☐ REMOVE PASSENGER SIDE DASH
- ☐ DISCONNECT CENTER DASH AND PULL FORWARD TO REMOVE OEM CENTER DASH BEZEL
- ☐ REMOVE OEM RADIO
- ☐ REMOVE CONTROL PANEL (RETAIN), REFER TO CONTROL PANEL CONVERSION KIT TO ASSEMBLE CONTROL PANEL.
- ☐ DROP STEERING COLUMN
- ☐ DISCONNECT DRIVER SIDE DASH AND PULL FORWARD

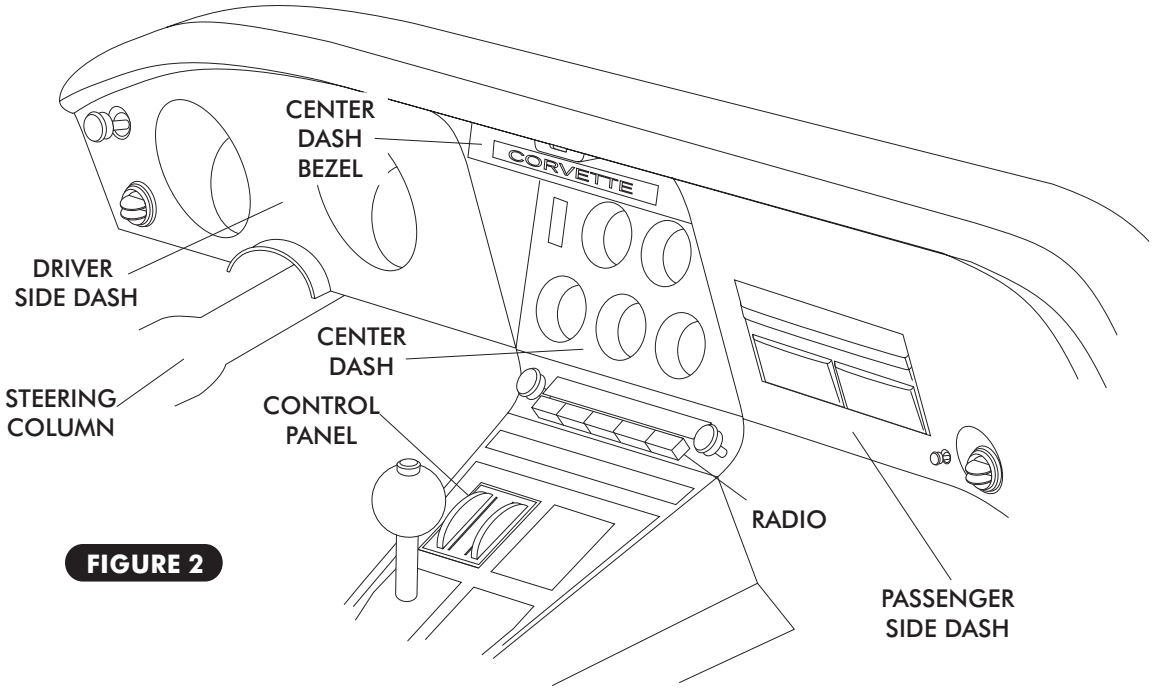

FIGURE 2

- ☐ REMOVE THE DEFROST DUCT (RETAIN), FLOOR HEATER DUCT AS SHOWN IN FIGURE 3 BELOW.
- ☐ REMOVE THE HEATER AS SHOWN.

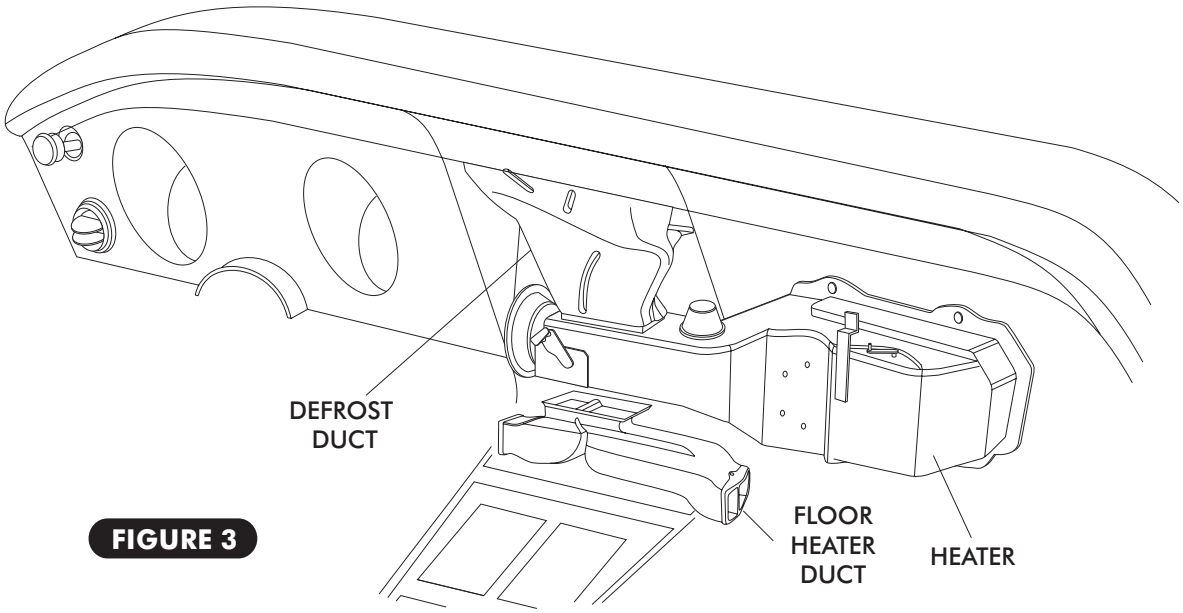

FIGURE 3

ASTRO AIR VENTILATION DUCTS REMOVAL

- ☐ REMOVE DRIVER SIDE & PASSENGER SIDE ASTRO AIR VENTILATION DUCTS AND DISCARD. SEE FIGURE 4 BELOW.
- ☐ REMOVE PASSENGER SIDE DASH SUPPORT BRACE (DISCARD) AND CUT OFF MOUNTING TAB ON THE KICK PANEL AS SHOWN IN FIGURE 4.
- ☐ REMOVE THE DRIVER SIDE & PASSENGER SIDE ASTRO AIR VENTILATION DUCT MOUNTING BRACKETS AS SHOWN IN FIGURE 4.
- ☐ INSTALL INSIDE FRESH AIR CAPS ON DRIVER & PASSENGER SIDE AS SHOW IN FIGURE 4a BELOW

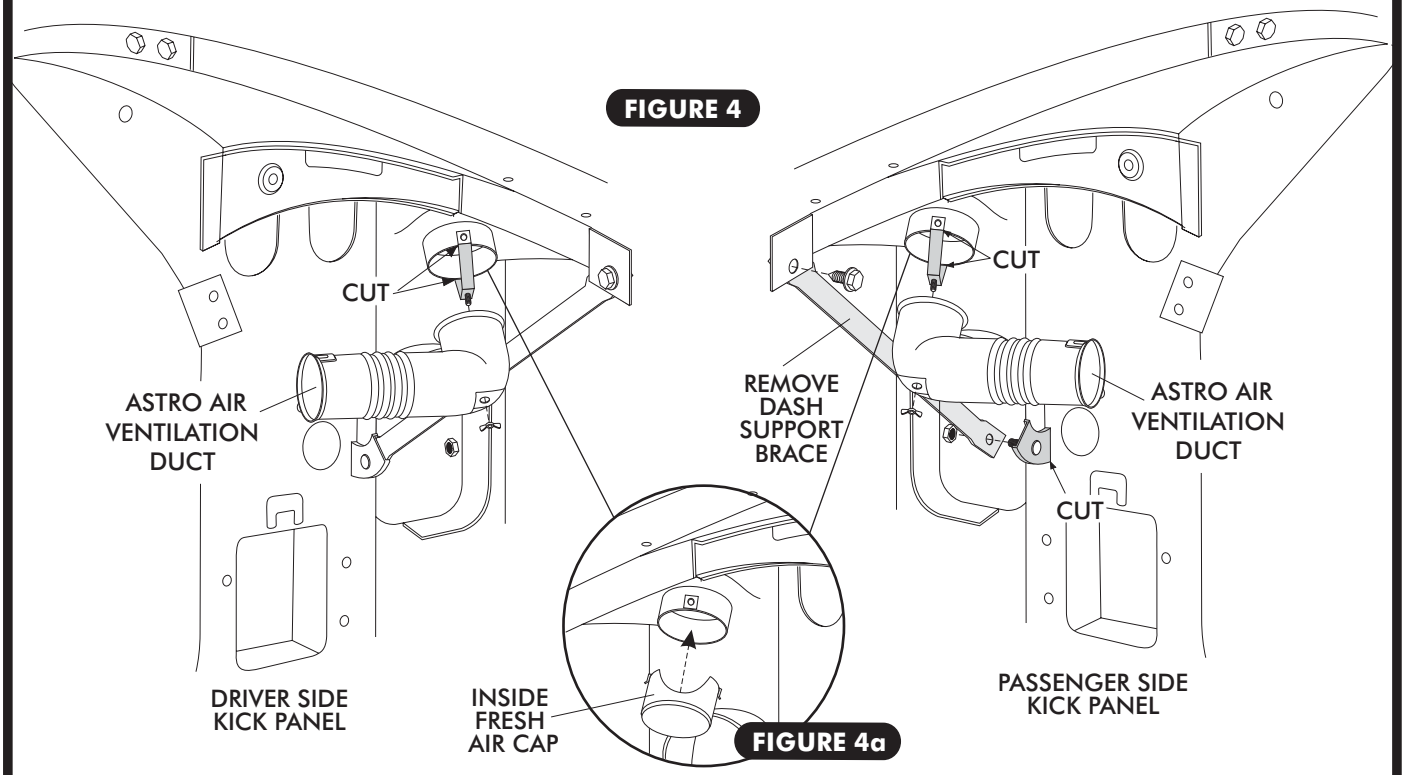

FIGURE 4

FIGURE 4a

FRESH AIR COVER INSTALLATION

- ☐ APPLY A 1/4" BEAD OF SILICONE AROUND THE BACK SIDE OF THE FRESH AIR CAP AS SHOWN IN FIGURE 4b BELOW.
- ☐ ATTACH FRESH AIR CAP TO FIREWALL USING A 1/4-20 x 1" BOLT AND WASHER, SEE FIGURE 4b.

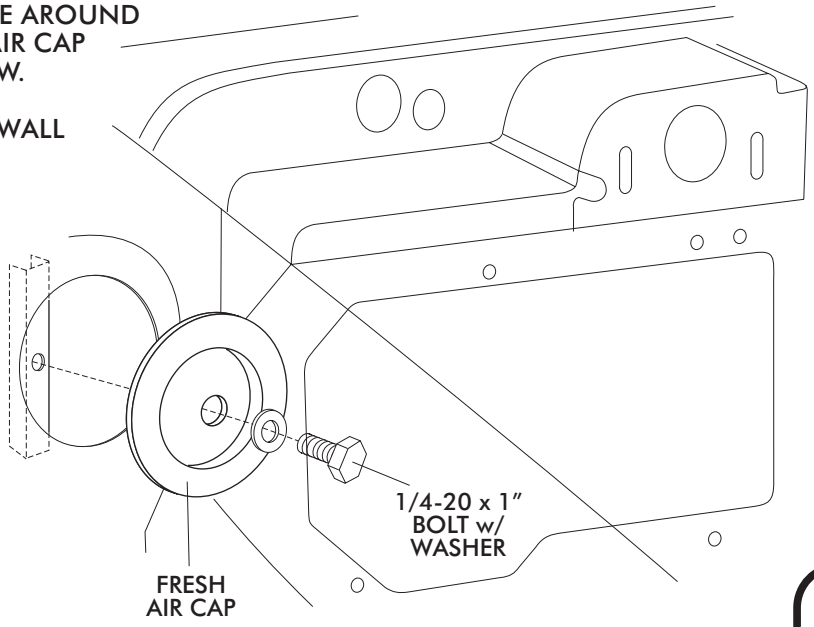

FIGURE 4b

CONDENSER ASSEMBLY & INSTALLATION

☐ REFER TO SEPARATE INSTRUCTIONS INCLUDED WITH THE CONDENSER KIT TO INSTALL THE CONDENSER. REFER TO FIGURE 5 BELOW FOR CONDENSER LOCATION.

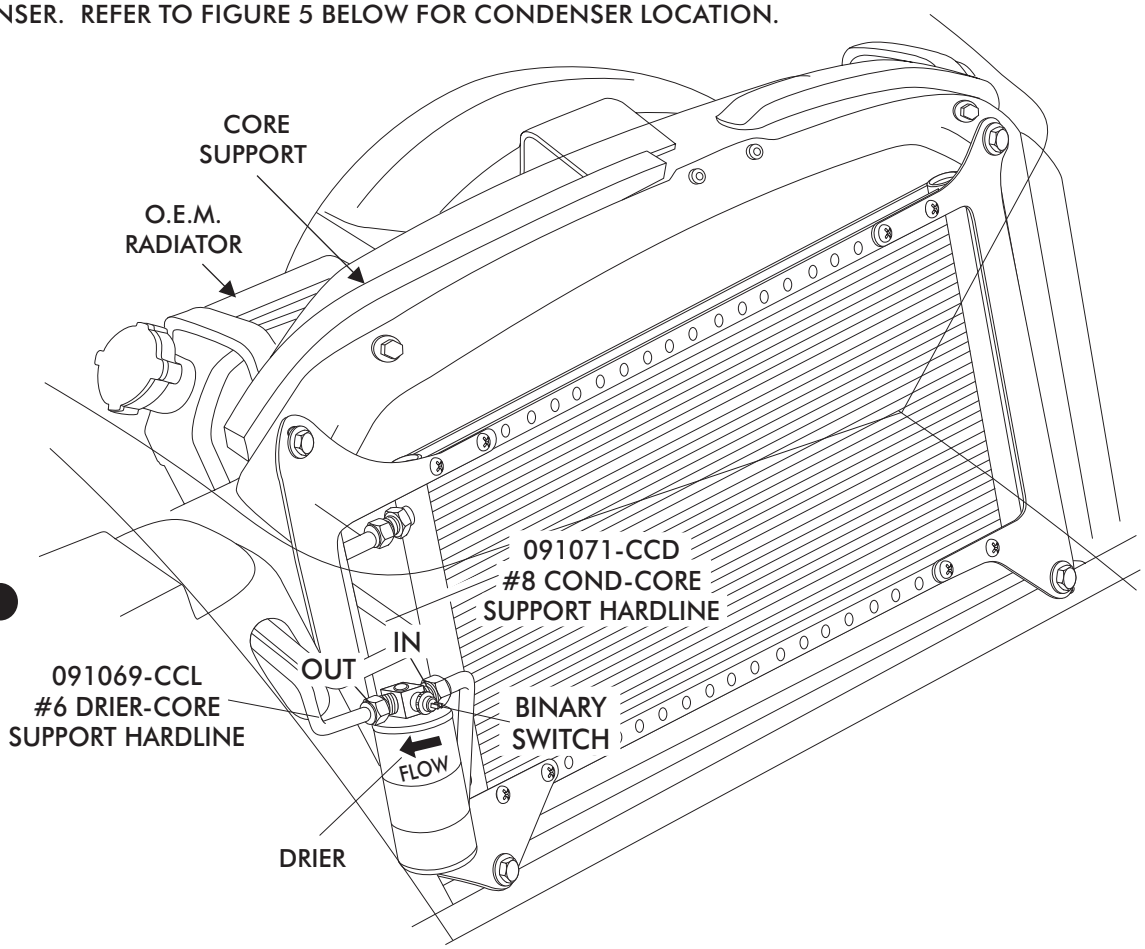

FIGURE 5

COMPRESSOR & BRACKETS

☐ REFER TO SEPARATE INSTRUCTIONS INCLUDED WITH THE BRACKET KIT TO INSTALL THE COMPRESSOR BRACKET. REFER TO FIGURE 6 BELOW FOR COMPRESSOR MOUNTING POSITION.

PULLEYS

☐ IN MOST INSTANCES EXISTING BELT LENGTHS WILL REMAIN THE SAME. SEE FIGURE 6 BELOW.

PULLEYS (VINTAGE AIR) SHORT PUMP SMALL BLOCK CHEVY (STEEL PULLEY)

22503-VCA - WATER PUMP PULLEY *(DOUBLE GROOVE)*

22506-VCA - CRANKSHAFT PULLEY *(DOUBLE GROOVE)*
(WITH POWER STEERING A 3 GROOVE CRANK PULLEY IS REQUIRED)

22507-VCA - CRANKSHAFT PULLEY *(TRIPLE GROOVE)*

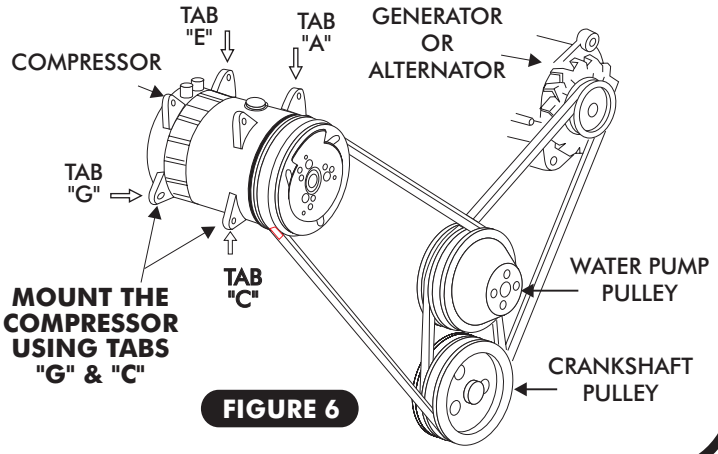

FIGURE 6

NOTE: BELT ROUTING MAY VARY WITH DIFFERENT BRACKET SETS. ALWAYS REFER TO INSTRUCTIONS INCLUDED WITH BRACKETS.

O.E.M. DEFROST DUCT MODIFICATION

☐ MEASURE 6" FROM THE TOP OF THE DEFROST DUCT AND MARK AS SHOWN IN FIGURE 7 BELOW. CUT OFF THE BOTTOM PORTION OF THE DEFROST DUCT AS SHOWN.

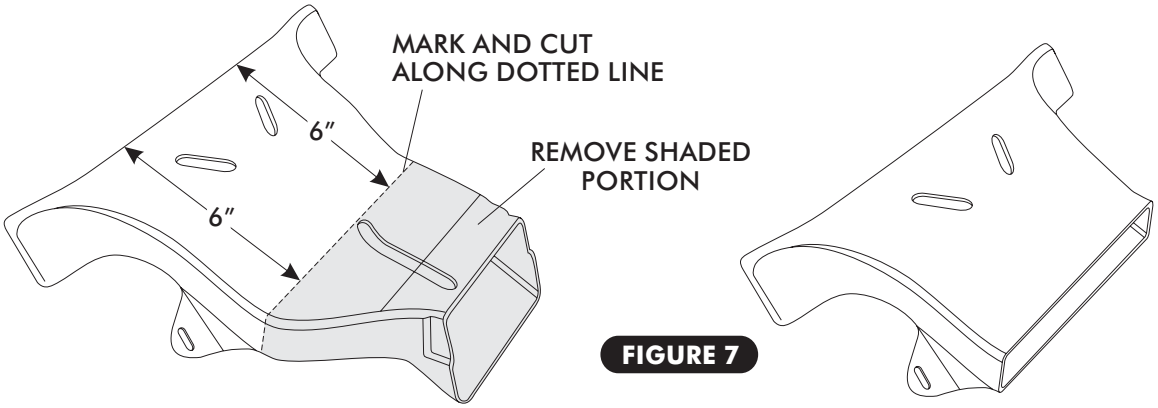

FIGURE 7

☐ LOCATE THE DEFROST DUCT TEMPLATE ON PAGE 27, PLACE THE TEMPLATE OVER THE DEFROST DUCT AS SHOWN IN FIGURE 7a BELOW.

☐ USING A PENCIL OR SCRIBE MARK ALONG THE EDGE OF THE TEMPLATE AS SHOWN.

☐ REMOVE THE TEMPLATE AND CUT ALONG THE DOTTED LINE AND REMOVE THE TOP PORTION OF THE DEFROST DUCT AS SHOWN IN FIGURE 7a. ***NOTE: DO NOT CUT COMPLETELY THROUGH THE DEFROST DUCT, ONLY REMOVE THE SHADE PORTION AS SHOWN.***

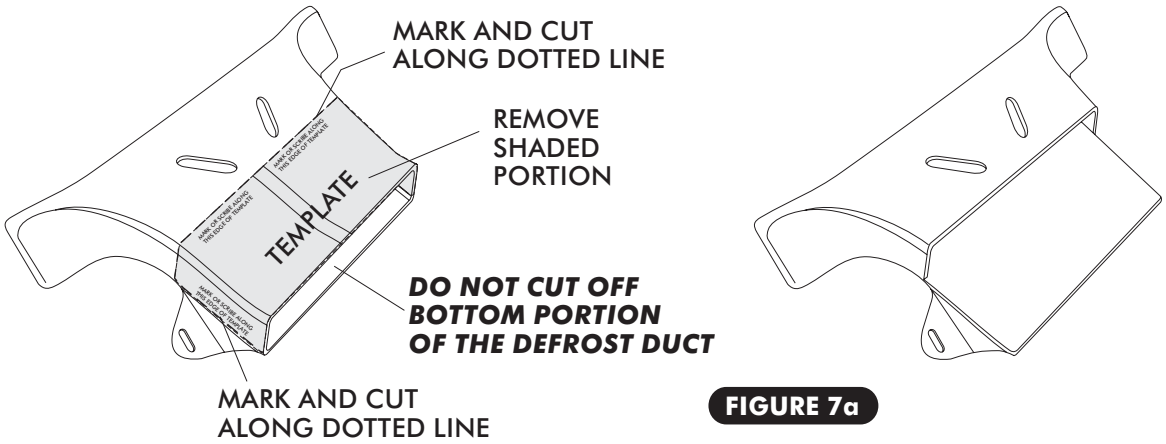

FIGURE 7a

☐ INSTALL THE DEFROST DUCT HOSE ADAPTER AS SHOWN IN FIGURE 8 BELOW.

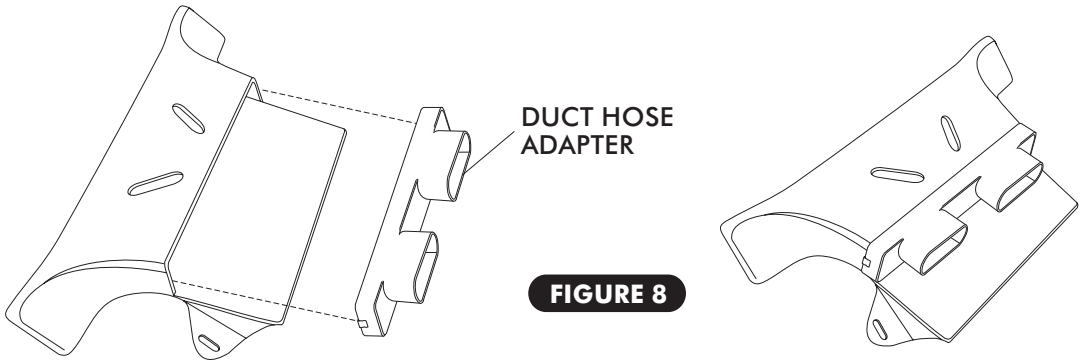

FIGURE 8

DEFROST DUCT & PS AND DS SIDE A/C DUCT HOSE ADAPTER INSTALLATION

- ☐ USING THE O.E.M. DEFROST DUCT MOUNTING SCREWS INSTALL THE DEFROST DUCT WITH HOSE ADAPTER AS SHOWN IN FIGURE 9 BELOW.
- ☐ REMOVE VENT KNOBS AND RETAIN

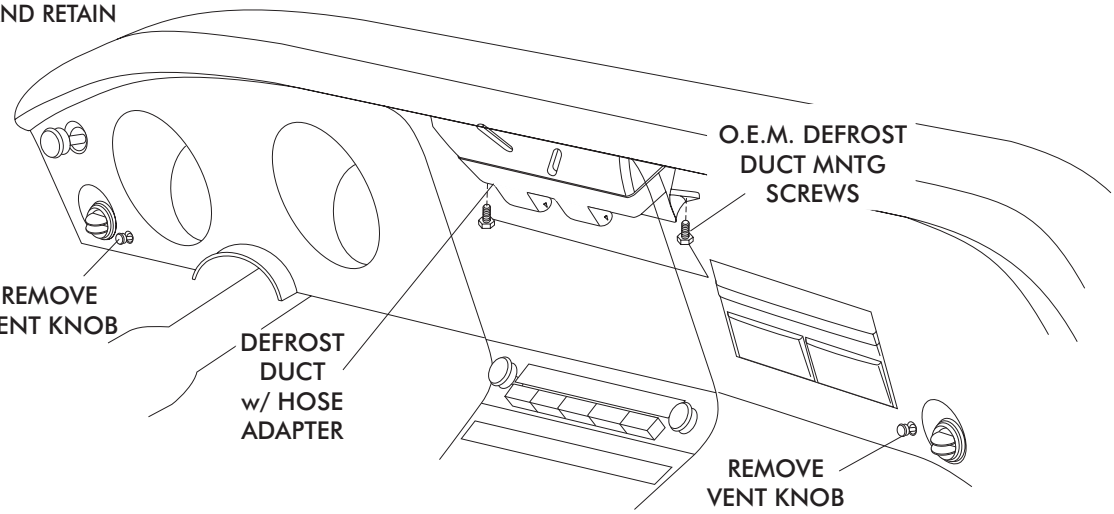

FIGURE 9

- ☐ REMOVE THE PASSENGER AND DRIVER SIDE VENT ADAPTERS (DISCARD) AS SHOWN IN FIGURE 10 BELOW. ***NOTE: RETAIN MOUNTING HARDWARE.***
- ☐ INSTALL THE INNER AND OUTER A/C DUCT HOSE ADAPTERS AS SHOWN IN FIGURE 10 BELOW. USE O.E.M. SCREWS TO SECURE ADAPTERS TO DASH.
- ☐ INSTALL THE VENT KNOB AS SHOWN USING A 10-24 x 1 1/4" PH PAN HEAD SCREW AND 3/16" FLAT WASHER. ***NOTE: THE PASSENGER SIDE INSTALLATION IS SHOWN BELOW IN FIGURE 10, REPEAT THE SAME STEPS FOR THE DRIVER SIDE INSTALLATION.***

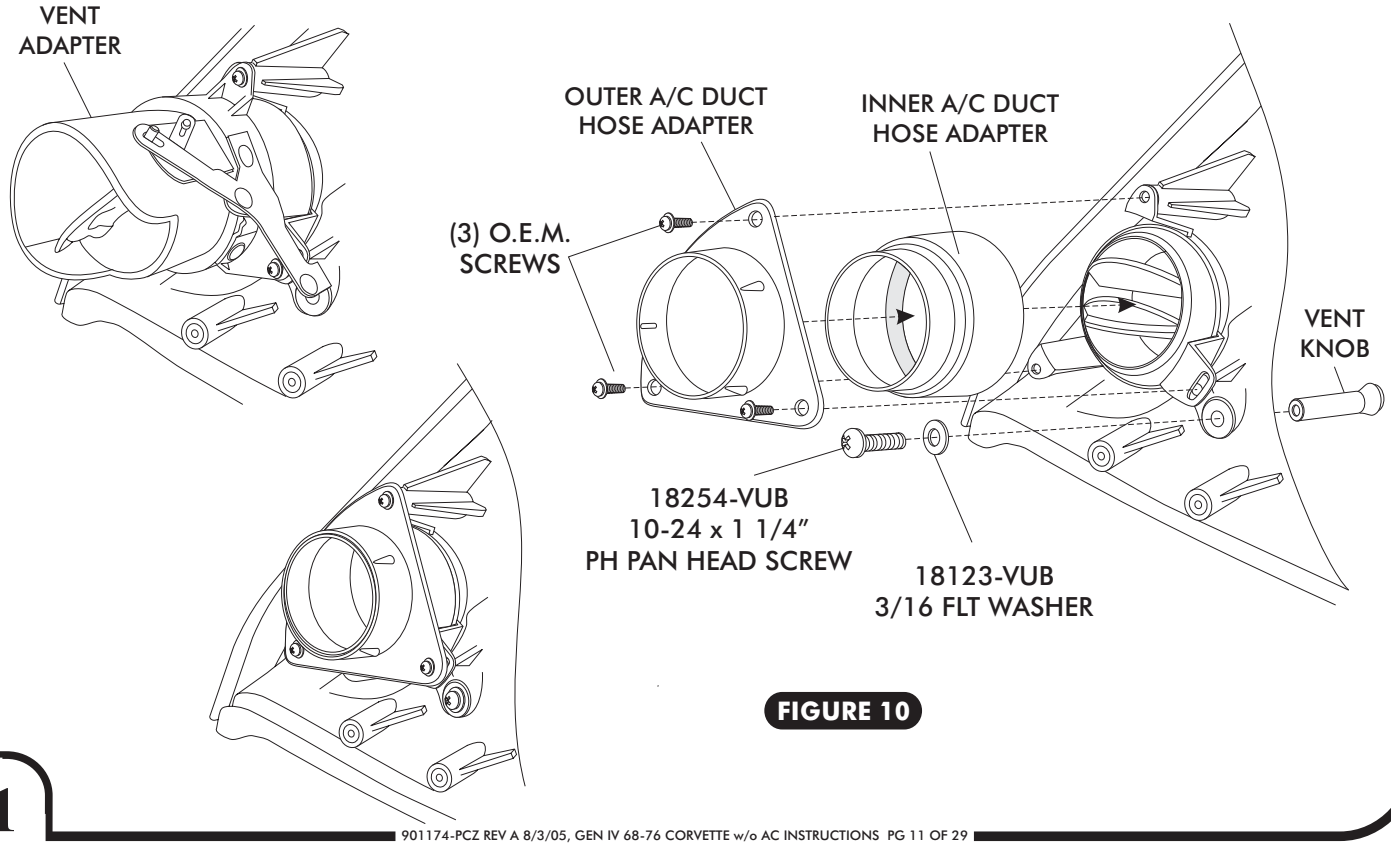

FIGURE 10

CENTER LOUVER ADAPTER INSTALLATION

☐ REMOVE THE O.E.M. CENTER DASH BEZEL & O.E.M. WIPER SWITCH AS SHOWN IN FIGURE 11 BELOW.

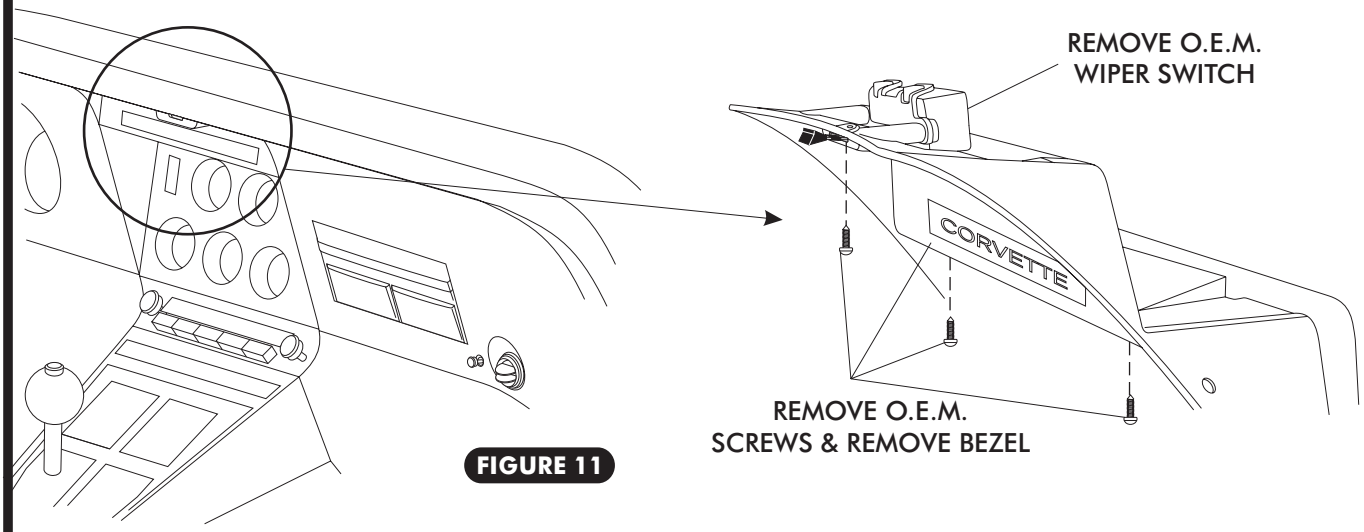

FIGURE 11

☐ INSTALL THE WIPER SWITCH BRACKET & GROUND WIRE USING (2)10-32 x ½ PH PAN HEAD SCREWS & (2) NUTS w/ STAR WASHER AS SHOWN IN FIGURE 11a BELOW.

☐ INSTALL THE O.EM WIPER SWITCH ON THE CENTER LOUVER BEZEL USING (2) 6-32 x 3/8 PH FLAT HEAD SCREWS w/ NYLOCK NUTS AS SHOW IN FIGURE 11a BELOW.

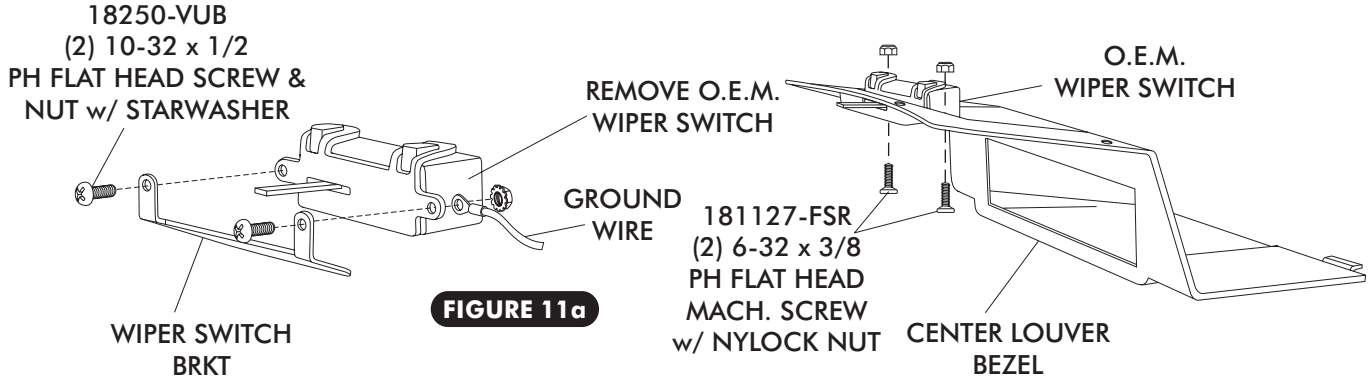

FIGURE 11a

☐ INSTALL RECTANGLE LOUVER AS SHOW IN FIGURE 11b TO CENTER LOUVER BEZEL.

☐ USING (2) 8-15 x 3/4 PH FLAT HEAD TAP SCREWS INSTALL THE CENTER LOUVER BEZEL IN THE CENTER DASH BEZEL AS SHOW IN FIGURE 11b. ***NOTE: SECURE THE GROUND WIRE BETWEEN THE CENTER LOUVER BEZEL AND THE DASH.***

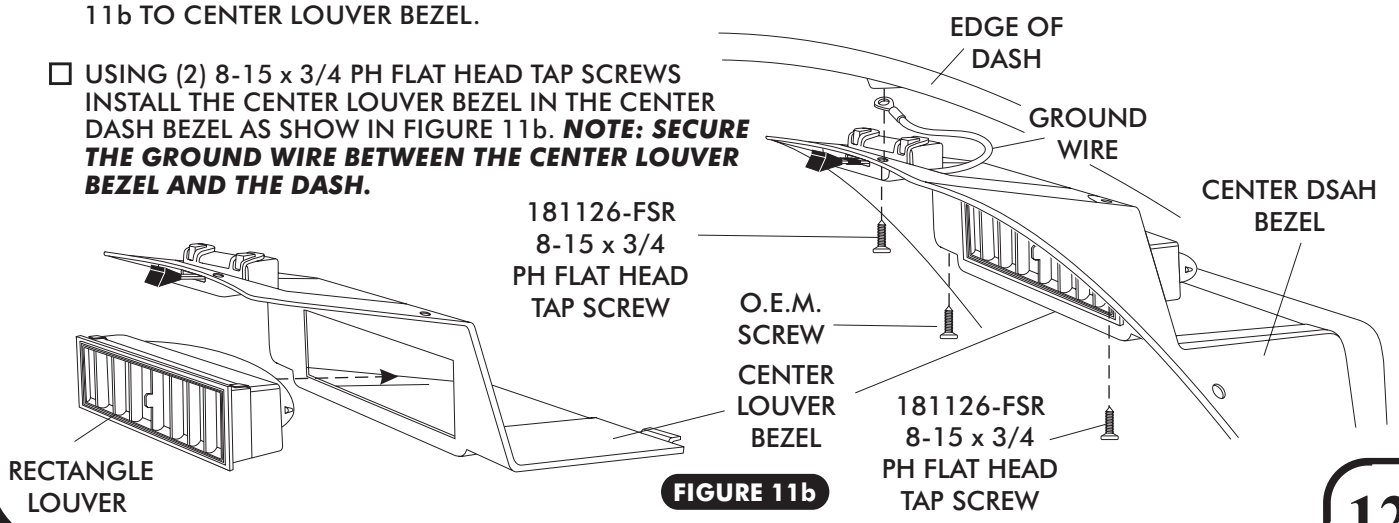

FIGURE 11b

FIREWALL MODIFICATION

- ☐ CUT OUT FIREWALL MODIFICATION TEMPLATE ON PAGE 28.
- ☐ ALIGN AND TAPE INTO PLACE AS SHOWN AS SHOWN IN FIGURE 11c AND MARK AROUND THE DOTTED LINE.
- ☐ REMOVE THE TEMPLATE CUT ALONG THE DOTTED LINE TO REMOVE THE SHADED PORTION OF THE FIREWALL AS SHOWN IN FIGURE 11d.

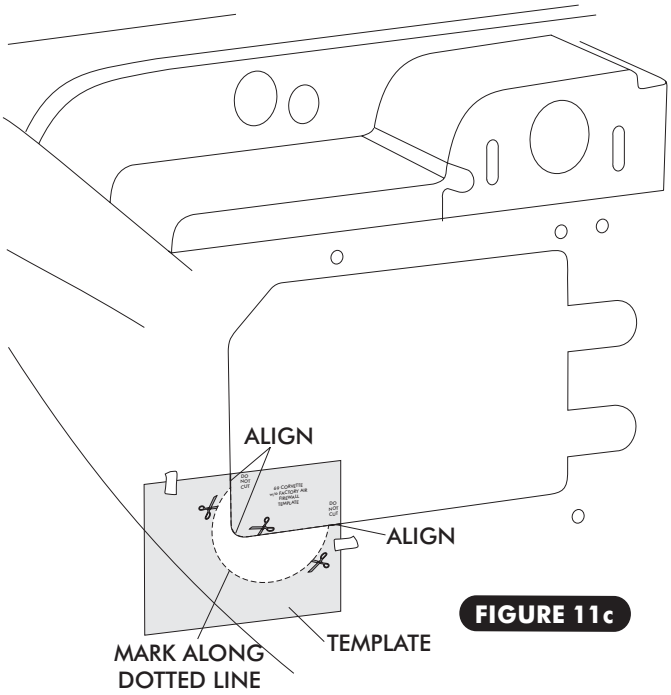

FIGURE 11c

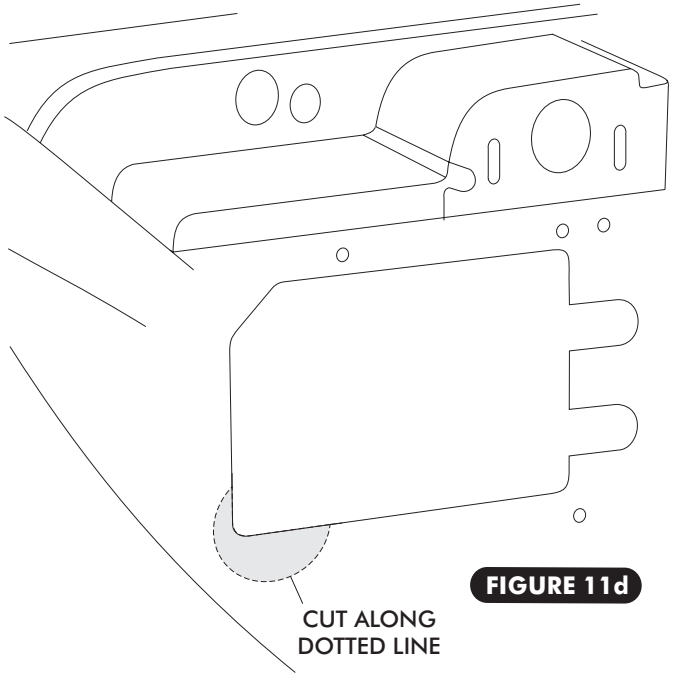

FIGURE 11d

EVAPORATOR INSTALLATION

- ☐ ON A WORK BENCH, INSTALL EVAPORATOR REAR BRACKET, AND INSTALL EVAPORATOR HARDLINES WITH PROPERLY LUBRICATED O-RINGS. (SEE FIGURE 17, PAGE 18, AND FIGURES 22, PAGE 22.)
- ☐ INSTALL FRONT MOUNTING BRACKET ON EVAPORATOR USING (2) 1/4-20 x 1/2" HEX BOLTS AND TIGHTEN AS SHOWN IN FIGURE 12, PAGE 14.
- ☐ PLACE 4mil POLYETHYLENE SHEET OVER THE STEPPER MOTORS. SEE FIGURE 13, PAGE 14.
- ☐ LIFT EVAPORATOR UNIT UP UNDER THE DASHBOARD SEE FIGURE 13, PAGE 14. SECURE LOOSELY TO THE FIREWALL FROM THE ENGINE COMPARTMENT SIDE USING A 1/4-20 x 1" BOLT AND WASHER, SEE FIGURE 13, PAGE 14.
- ☐ USING A #14 x 3/4" SHEETMETAL SCREW SECURE THE FRONT EVAPORATOR MOUNTING BRACKET TO THE INNER COWL BY ALIGNING THE RIGHT HOLE IN FRONT EVAPORATOR MOUNTING BRACKET WITH THE O.E.M. HOLE IN INNER COWL. SEE FIGURE 13, PAGE 14
- ☐ TO SECURE THE LEFT SIDE OF THE FRONT MOUNTING BRACKET, WITH EVAPORATOR MOUNTING BRACKET IN PLACE DRILL A 3/16" HOLE IN INNER COWL USING THE LEFT MOUNTING BRACKET HOLE AS A GUIDE. SECURE THE BRACKET TO THE INNER COWL USING A #14 x 3/4" SHEETMETAL SCREW SEE FIGURE 13, PAGE 14.
- ☐ VERIFY THAT EVAPORATOR UNIT IS LEVEL AND SQUARE TO THE DASH, THEN TIGHTEN ALL MOUNTING BOLTS. (***NOTE**: TIGHTEN THE BOLT ON FIREWALL FIRST, THEN THE FRONT MOUNTING BRACKET SCREWS.)*

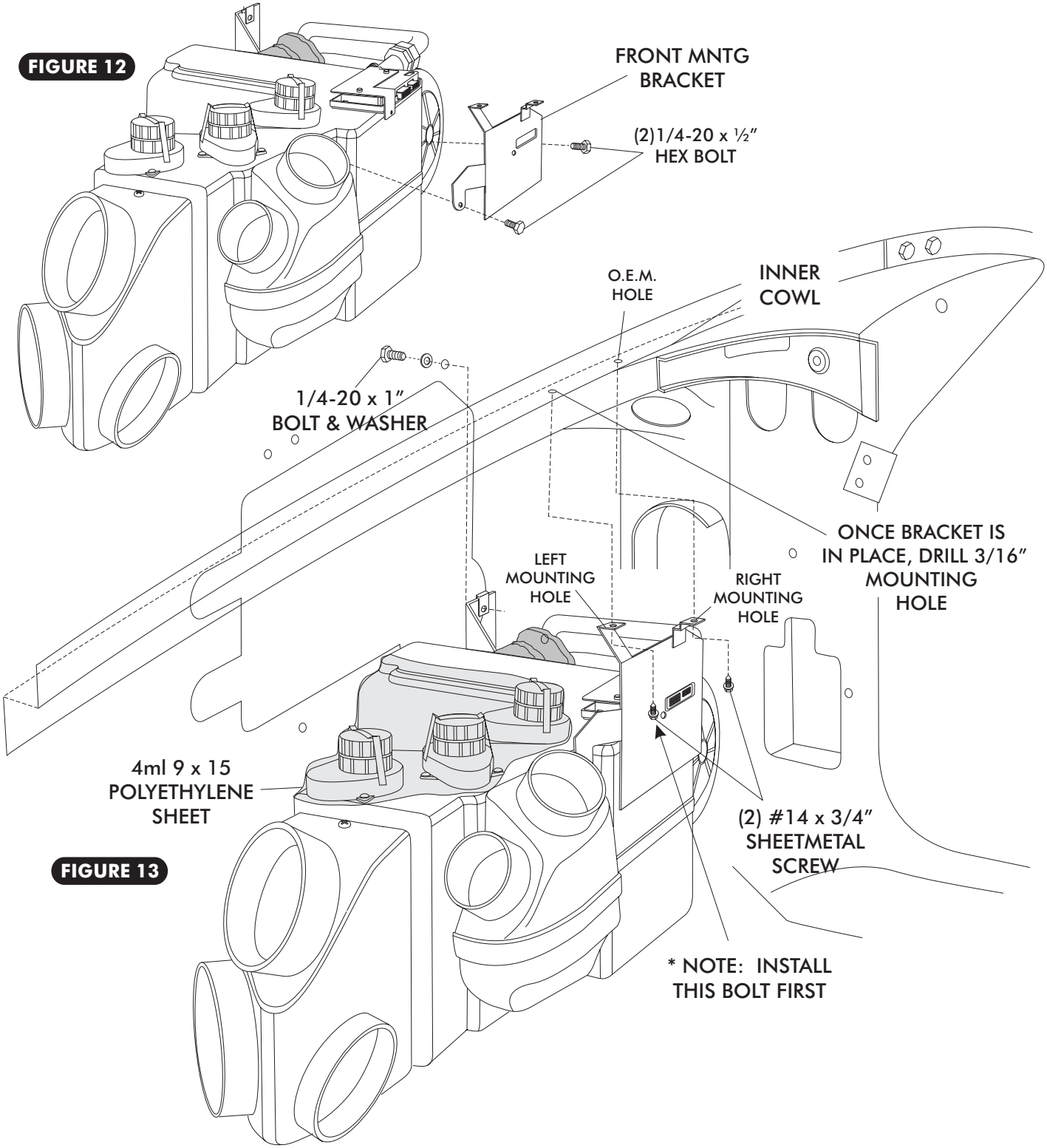
FIGURE 12
FRONT MNTG BRACKET
(2)1/4-20 x ½" HEX BOLT
O.E.M. HOLE
INNER COWL
1/4-20 x 1" BOLT & WASHER
ONCE BRACKET IS IN PLACE, DRILL 3/16" MOUNTING HOLE
LEFT MOUNTING HOLE
RIGHT MOUNTING HOLE
4ml 9 x 15 POLYETHYLENE SHEET
(2) #14 x 3/4" SHEETMETAL SCREW
FIGURE 13
* NOTE: INSTALL THIS BOLT FIRST

DRAIN HOSE INSTALLATION

- ☐ IN-LINE WITH THE DRAIN, LIGHTLY MAKE A MARK ON THE FIREWALL. MEASURE ONE INCH DOWN AND DRILL A 5/8" HOLE THROUGH THE FIREWALL. SEE FIGURE 14 BELOW.
- ☐ INSTALL DRAIN HOSE TO BOTTOM OF EVAPORATOR UNIT AND ROUTE THROUGH FIREWALL. SEE FIGURE FIGURE 14, BELOW.

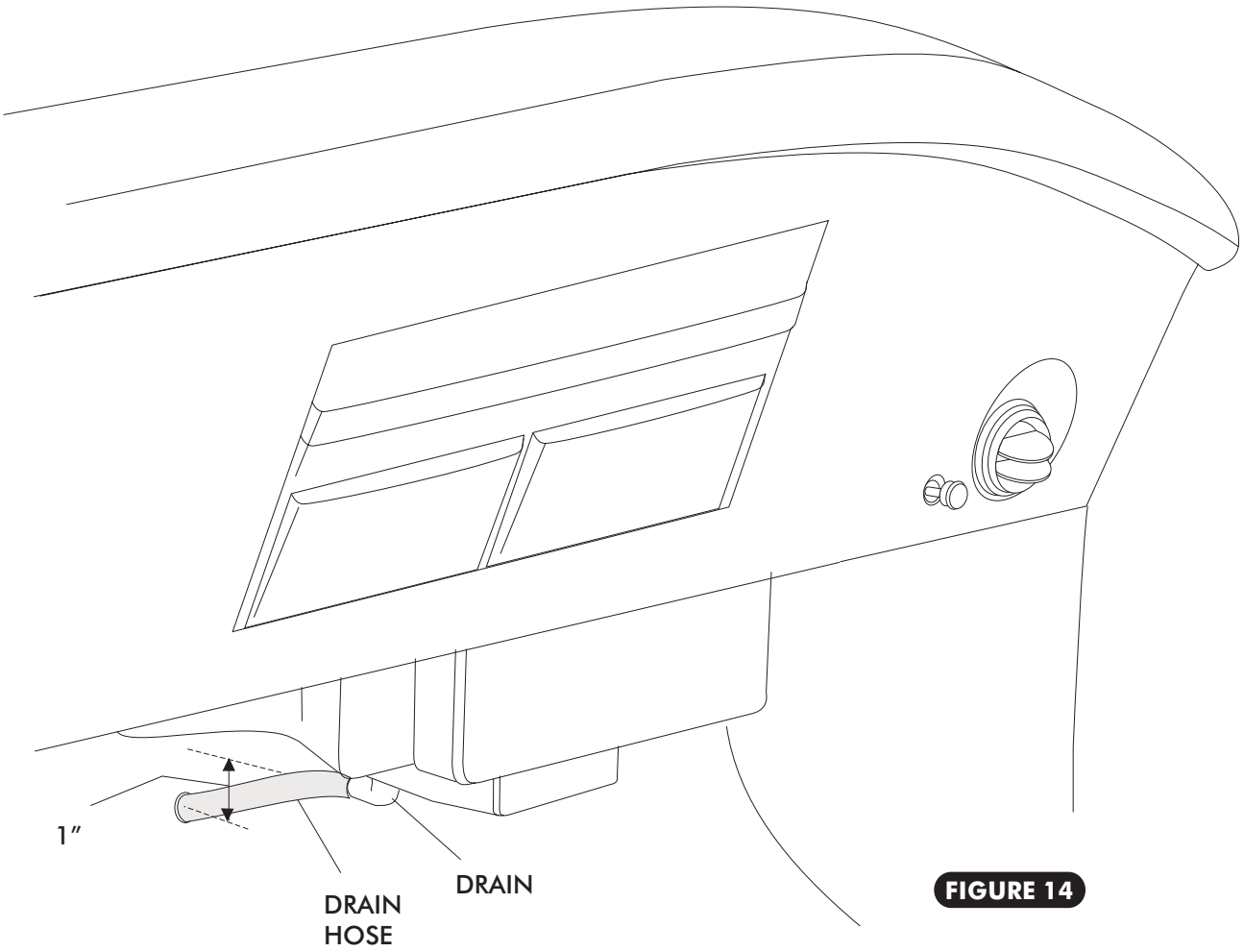

FIGURE 14

FIREWALL COVER

- ☐ LOCATE THE DIMPLE IN THE BACK SIDE OF THE FIREWALL COVER. USE A ½" DRILL BIT AND DRILL ½" HOLE IN FIREWALL COVER AS SHOWN IN FIGURE 15 BELOW
- ☐ APPLY A 1/4" BEAD OF SILICONE AROUND THE BACK SIDE OF THE FIREWALL COVER AS SHOWN IN FIGURE 15 BELOW.
- ☐ PASS LINES THROUGH FIREWALL COVER, AND SECURE WITH (2) 7/16 PANEL RETAINERS. SEE FIGURE 15 BELOW.
- ☐ ONCE THE FIREWALL COVER IS IN PLACE LOCATE THE HOLE ON THE LEFT SIDE OF THE FIREWALL COVER AND DRILL A 3/8" HOLE THROUGH THE FIREWALL AND INSTALL A 7/16 PANEL RETAINER TO SECURE THE LEFT SIDE OF THE FIREWALL COVER TO FIREWALL. SEE FIGURE 15 BELOW.
- ☐ APPLY A 1/4" BEAD OF SILICONE AROUND THE BACK SIDE OF THE FIREWALL COVER CAP AS SHOWN IN FIGURE 15 BELOW. USING (2) #8 x ½" PH PAN HEAD SCREWS INSTALL FIREWALL COVER CAP AS SHOWN IN FIGURE 15 BELOW.

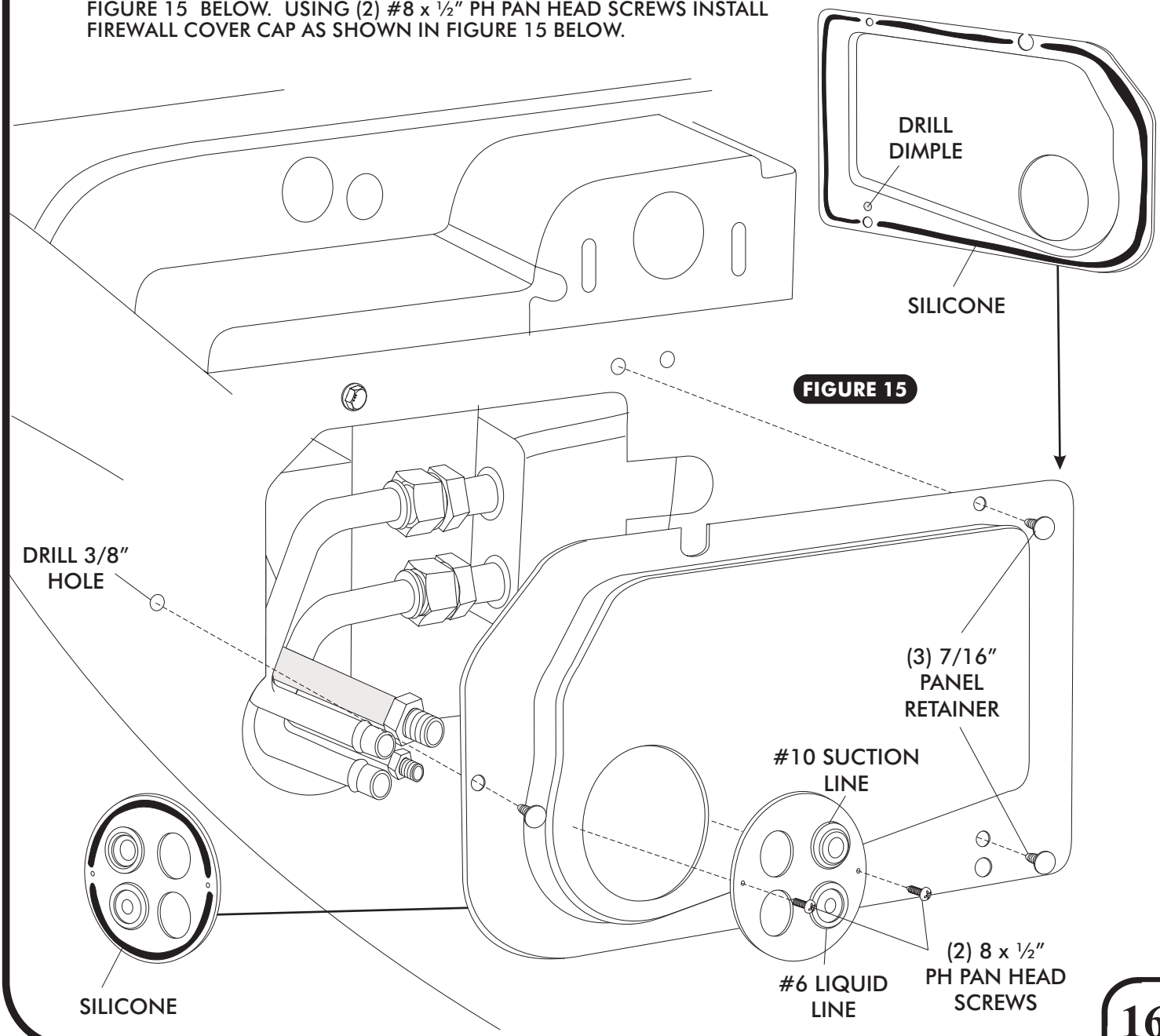

FIGURE 15

A/C HOSE INSTALLATION

STANDARD HOSE KIT

- ☐ LOCATE THE #8 COMPRESSOR A/C HOSE. LUBRICATE (2) #8 O-RINGS (SEE FIGURE 16, PAGE 18) AND CONNECT THE 90° FITTING TO THE #8 DISCHARGE PORT ON THE COMPRESSOR AND ROUTE THE STRAIGHT FITTING TO THE #8 CONDENSER HARDLINE COMING THROUGH THE CORE SUPPORT SEE FIGURE 18, PAGE18. TIGHTEN EACH FITTING CONNECTION AS SHOWN IN FIGURE17, PAGE 18.
- ☐ LOCATE THE #10 COMPRESSOR A/C HOSE. LUBRICATE (2) #10 O-RINGS (SEE FIGURE 16, PAGE 18) AND CONNECT THE 135° FITTING TO THE #10 SUCTION PORT ON THE COMPRESSOR AND ROUTE THE STRAIGHT FITTING TO THE #10 EVAPORATOR HARDLINE COMING THROUGH THE FIREWALL SEE FIGURE 18, PAGE 18. TIGHTEN EACH FITTING CONNECTION AS SHOWN IN FIGURE 17, PAGE 18. ***(NOTE: WRAP THE #10 FITTING CONNECTIONS AT FIREWALL WITH PRESS TAPE. SEE FIGURE 18, PAGE 18.***
- ☐ LOCATE THE #6 EVAP/COR HARDLINE AND LUBRICATE (2) #6 O-RINGS (SEE FIGURE 16 , PAGE 18) AND CONNECT THE HARDLINE TO THE #6 HARDLINE COMING THROUGH THE CORE SUPPORT FROM DRIER. ATTACH THE OTHER END OF THE HARDLINE WITH LUBRICATED ORING TO THE #6 EVAPORATOR HARDLINE COMING THROUGH THE FIREWALL. SEE FIGURE 18, PAGE18. TIGHTEN EACH FITTING CONNECTION AS SHOWN IN FIGURE 17, PAGE 18. USE A #2 ADEL CLAMP TO SECURE THE #6 EVAP/CORE HARDLINE TO THE INNER FENDERWELL AS SHOWN IN FIGURES 18 & 19 PAGES 18 & 19. SECURE THE ADEL CLAMP TO THE INNER FENFER USING A 10-32 x ½" MACHINE SCREW AND NUT.

MODIFIED A/C HOSE KIT

- ☐ REFER TO SEPARATE INSTRUCTIONS INCLUDED WITH MODIFIED HOSE KIT.

BIG BLOCK MODIFIED HOSE KIT

- ☐ LOCATE THE #8 COMPRESSOR A/C HOSE. LUBRICATE (2) #8 O-RINGS (SEE FIGURE 16, PAGE 18) AND CONNECT THE 90° FITTING TO THE #8 DISCHARGE PORT ON THE COMPRESSOR AND ROUTE THE STRAIGHT FITTING TO THE #8 CONDENSER HARDLINE COMING THROUGH THE CORE SUPPORT SEE FIGURE 19, PAGE 19. TIGHTEN EACH FITTING CONNECTION AS SHOWN IN FIGURE17, PAGE 18.
- ☐ LOCATE THE #10 COMPRESSOR A/C HOSE. LUBRICATE (2) #10 O-RINGS (SEE FIGURE 16, PAGE 18) AND CONNECT THE 90° FITTING TO THE #10 SUCTION PORT ON THE COMPRESSOR AND ROUTE THE STRAIGHT FITTING TO THE #10 EVAPORATOR HARDLINE COMING THROUGH THE FIREWALL SEE FIGURE 19, PAGE 19. TIGHTEN EACH FITTING CONNECTION AS SHOWN IN FIGURE 17, PAGE 18. ***(NOTE: WRAP THE #10 FITTING CONNECTIONS AT FIREWALL WITH PRESS TAPE. SEE FIGURE 18, PAGE 18.***
- ☐ LOCATE THE #6 EVAP/COR HARDLINE AND LUBRICATE (2) #6 O-RINGS (SEE FIGURE 16, PAGE 18) AND CONNECT THE HARDLINE TO THE #6 HARDLINE COMING THROUGH THE CORE SUPPORT FROM DRIER. ATTACH THE OTHER END OF THE HARDLINE WITH LUBRICATED ORING TO THE #6 EVAPORATOR HARDLINE COMING THROUGH THE FIREWALL. SEE FIGURE 18, PAGE18. TIGHTEN EACH FITTING CONNECTION AS SHOWN IN FIGURE 17, PAGE 18. USE A #2 ADEL CLAMP TO SECURE THE #6 EVAP/CORE HARDLINE TO THE INNER FENDERWELL AS SHOWN IN FIGURES 18 & 19 PAGES 18 & 19. SECURE THE ADEL CLAMP TO THE INNER FENFER USING A 10-32 x ½" MACHINE SCREW AND NUT.

HEATER HOSE & HEATER CONTROL VALVE INSTALLATION

- ☐ ROUTE A PIECE OF HEATER HOSE FROM THE WATER PUMP TO THE HEATER LINE COMING THROUGH THE FIREWALL AS SHOWN IN FIGURES 20, PAGE 20. SECURE USING HOSE CLAMPS.
- ☐ ROUTE A PIECE OF HEATER HOSE FROM THE INTAKE TO THE HEATER LINE COMING THROUGH THE FIREWALL AS SHOWN IN FIGURES 20, PAGE 20. NOTE: INSTALL HEATER CONTROL VALVE IN-LINE WITH INTAKE MANIFOLD (PRESSURE SIDE) HEATER HOSE, SECURE USING HOSE CLAMPS AS SHOWN IN FIGURE 20 ON PAGE 20. ***NOTE PROPER FLOW DIRECTION***.

SMALL BLOCK HOSE ROUTING

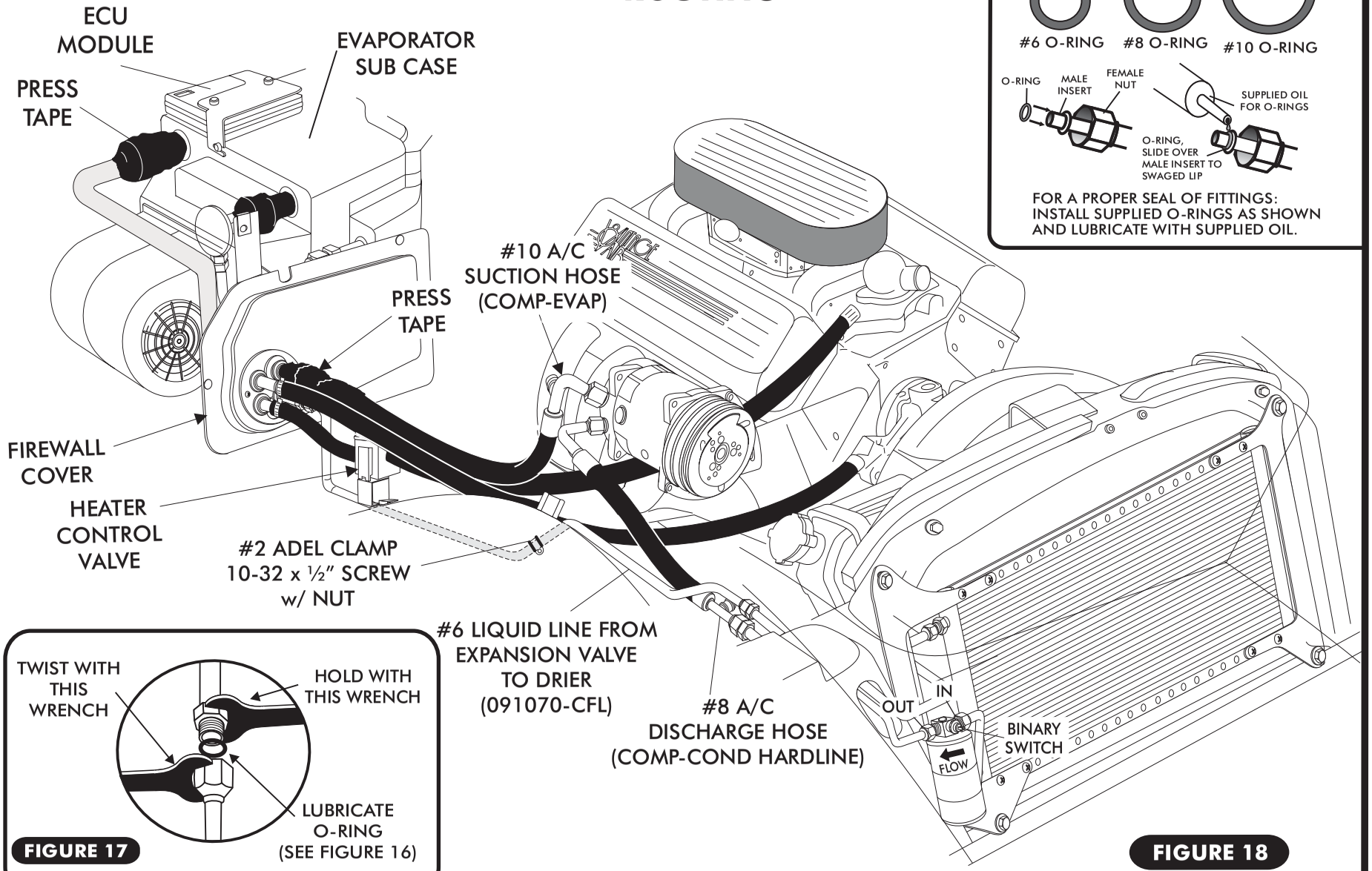

FIGURE 18

FIGURE 16

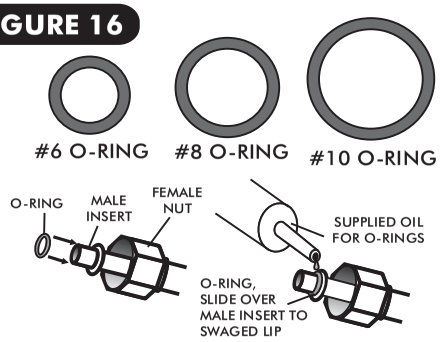

FOR A PROPER SEAL OF FITTINGS: INSTALL SUPPLIED O-RINGS AS SHOWN AND LUBRICATE WITH SUPPLIED OIL.

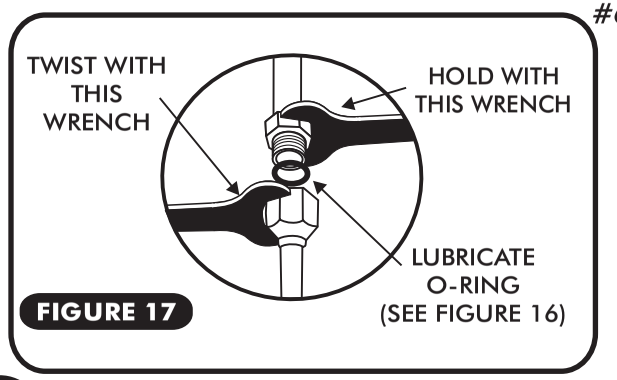

FIGURE 17

BIG BLOCK MODIFIED HOSE ROUTING

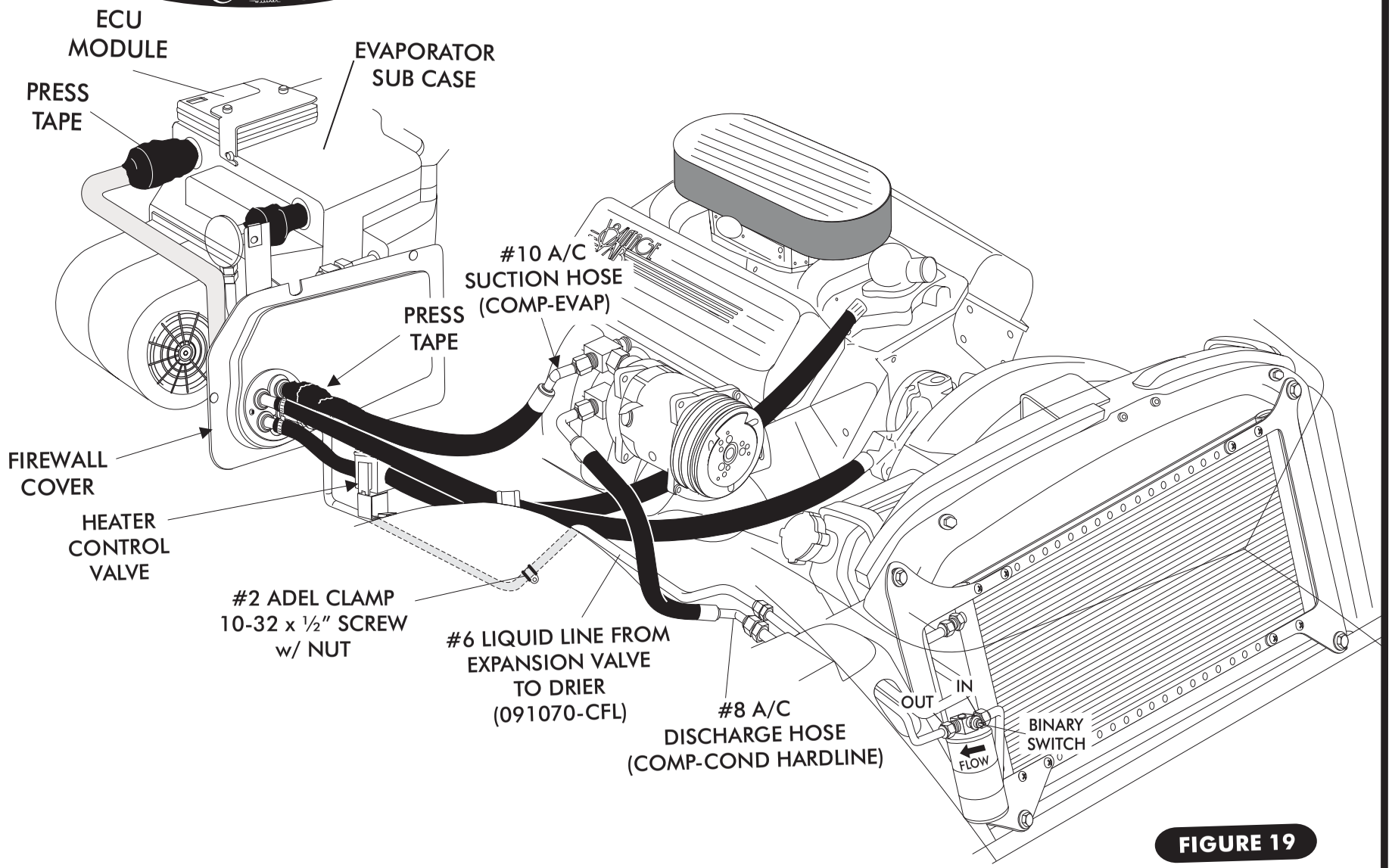

FIGURE 19

HEATER CONTROL VALVE INSTALLATION

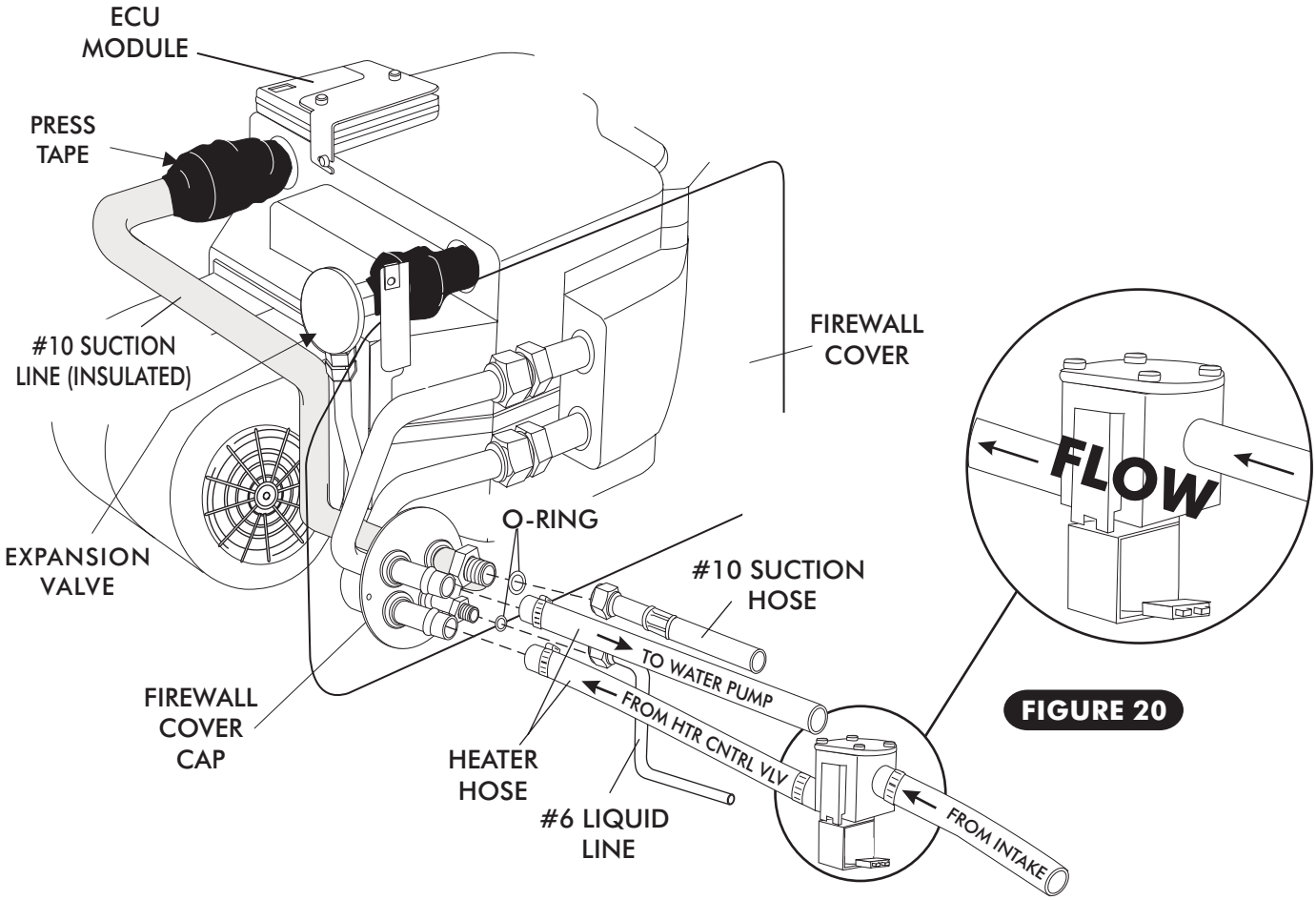

FIGURE 20

FINAL STEPS - DUCT HOSE ROUTING & CONTROL PANEL HARNESS

- ☐ INSTALL DUCT HOSES AS SHOWN IN FIGURE 21, PAGE 21.
- ☐ REINSTALL THE CENTER DASH ASSEMBLY.
- ☐ PLUG THE CONTROL PANEL HARNESS INTO THE ECU MODULE ON SUB CASE AS SHOWN. SEE FIGURE 21, PAGE 21.
- ☐ ROUTE THE CONTROL PANEL HARNESS UNDER THE CENTER DASH ASSEMBLY AND CONNECT THE CONTROL HARNESS TO THE CONTROL POTS AS SHOWN IN FIGURE 21, PAGE 21.
- ☐ PLUG THE WIRING HARNESS INTO THE ECU MODULE ON SUB CASE AS SHOWN. (WIRE ACCORDING TO WIRING DIAGRAM ON PAGE 23.)
- ☐ REINSTALL CONTROL PANEL.
- ☐ REINSTALL ALL PREVIOUSLY REMOVED ITEMS (BATTERY BOX & BATTERY).
- ☐ FILL RADIATOR WITH AT LEAST A 50/50 MIXTURE OF APPROVED ANTIFREEZE AND DISTILLED WATER. IT IS THE OWNER'S RESPONSIBILITY TO KEEP THE FREEZE PROTECTION AT THE PROPER LEVEL FOR THE CLIMATE IN WHICH THE VEHICLE IS OPERATED. FAILURE TO FOLLOW ANTIFREEZE RECOMMENDATIONS WILL CAUSE HEATER CORE TO CORRODE PREMATURELY AND POSSIBLY BURST IN AC MODE AND/OR FREEZING WEATHER, VOIDING YOUR WARRANTY.
- ☐ DOUBLE CHECK ALL FITTINGS, BRACKETS AND BELTS FOR TIGHTNESS.
- ☐ VINTAGE AIR RECOMMENDS THAT ALL AC SYSTEMS BE SERVICED BY A CERTIFIED AUTOMOTIVE AIR CONDITIONING TECHNICIAN.
- ☐ EVACUATE THE SYSTEM FOR A MINIMUM OF 45 MINUTES PRIOR TO CHARGING AND LEAK CHECK PRIOR TO SERVICING.
- ☐ CHARGE THE SYSTEM TO THE CAPACITIES STATED ON THE INFORMATION PAGE (PAGE 4) OF THIS INSTRUCTION MANUAL.

GEN IV 1968-76 CORVETTE w/o AC

CONTROL PANEL & DUCT HOSE ROUTING

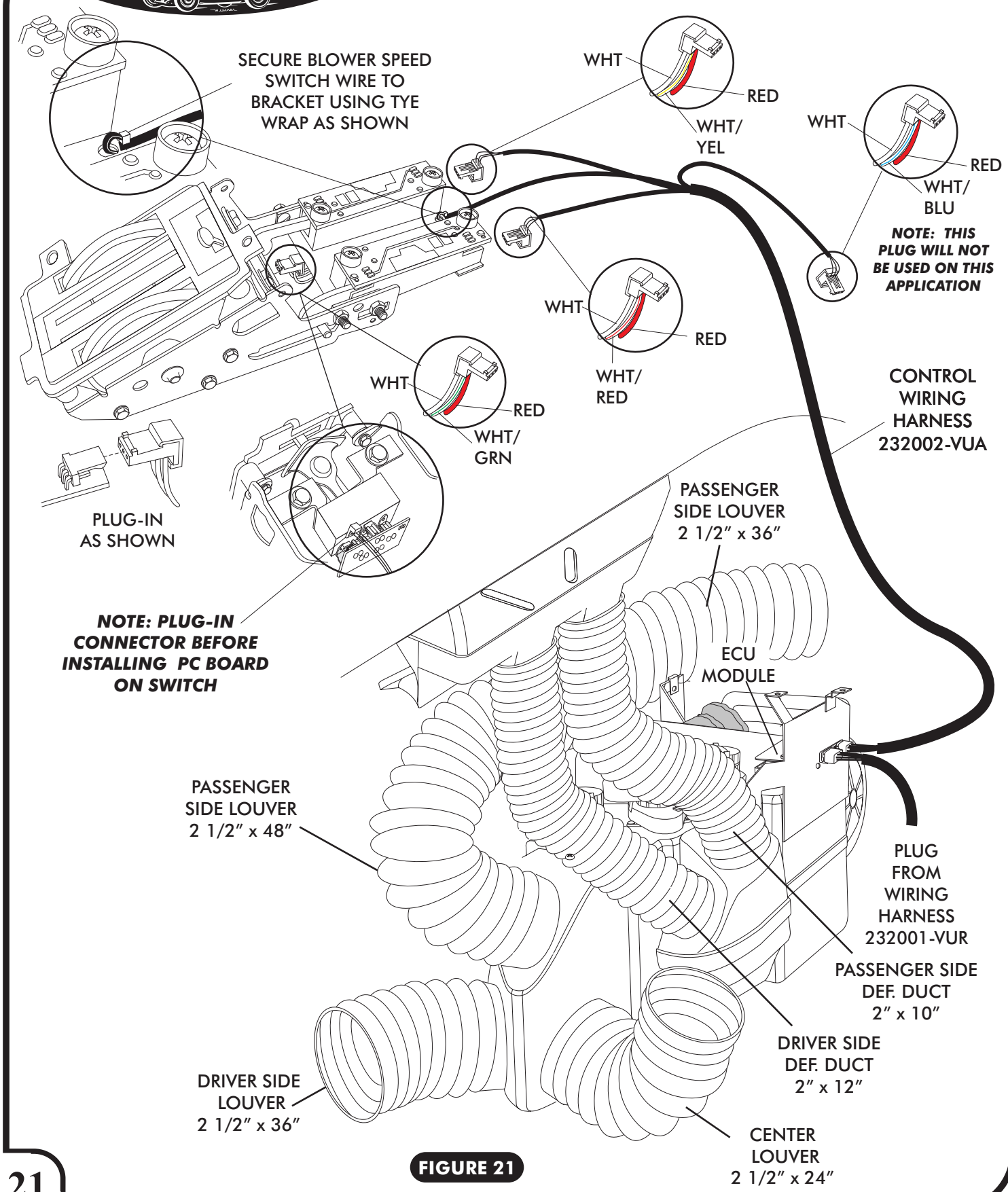

FIGURE 21

EVAPORATOR HARD LINE INSTALLATION

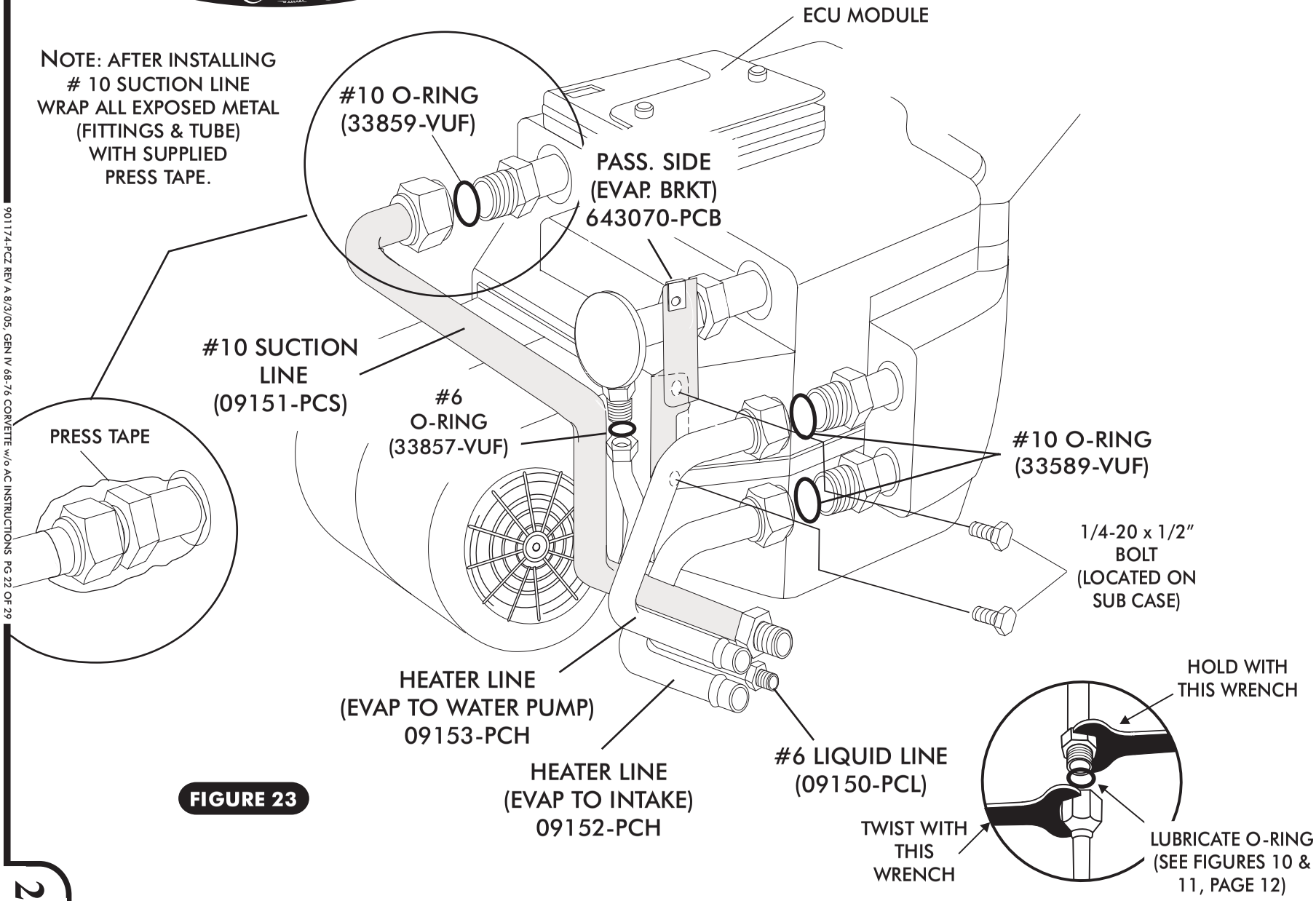

FIGURE 23

GEN IV 1968-76 CORVETTE w/o AC

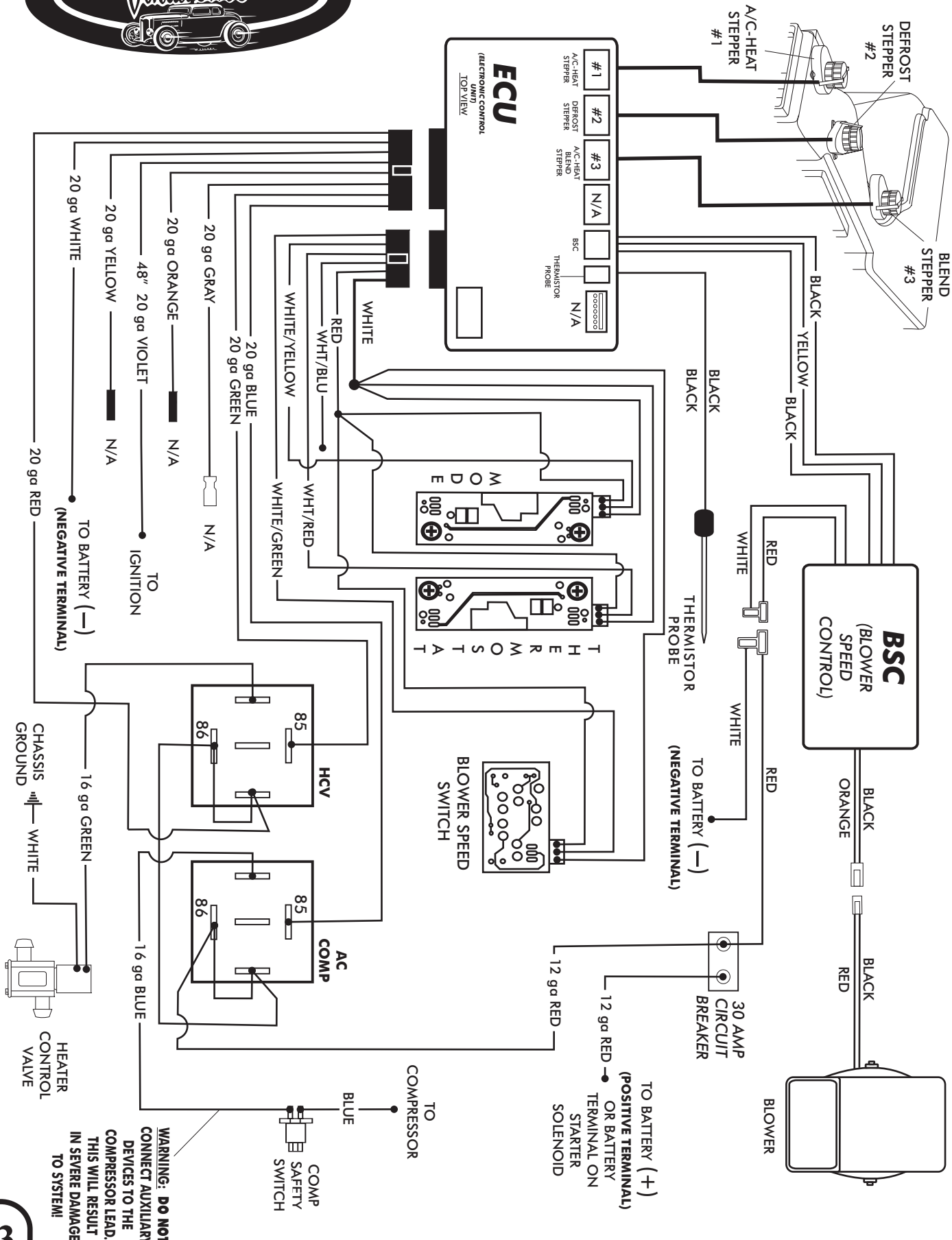

OPERATION OF CONTROLS

NOTE: WHEN EVER BATTERY POWER IS RE CONNECTED TO THE ECU, THE COMPUTER GOES THROUGH AN INITIALIZATION SEQUENCE. THIS INITIALIZATION MAY TAKE UP TO 30 SECONDS. DURING INITIALIZATION THE DOORS INSIDE THE UNIT WILL BE OPERATING. A LOW BATTERY MAY ALSO TRIGGER A RE-INITIALIZATION. WHEN THE ENGINE IS BEING CRANKED A WEAK BATTERY MAY DROP BELOW 7 VOLTS, TRIGGERING RE-INITIALIZATION.

SYSTEM OFF

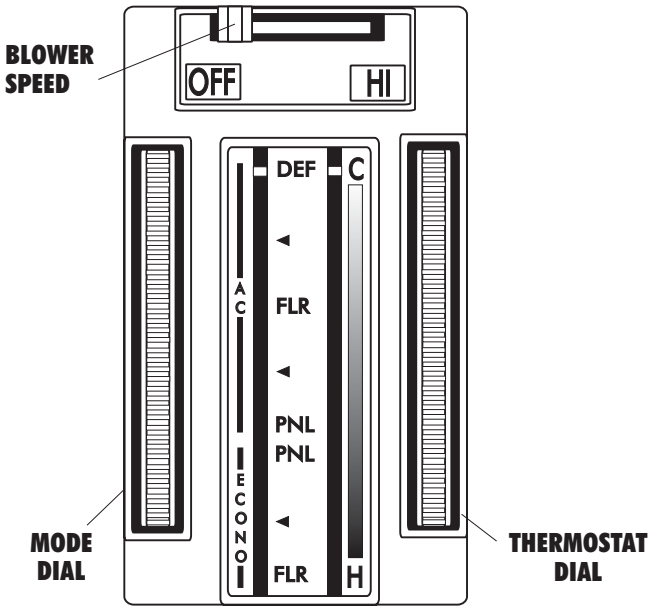

BLOWER SPEED
THIS LEVER CONTROLS THE BLOWER SPEED, FROM OFF TO HI

A/C THERMOSTAT DIAL
ROLL THE THERMOSTAT DIAL ALL THE WAY UP FOR MAXIMUM COOLING, ROLL THE DIAL DOWN TO DECREASE THE AMOUNT OF COOLING

MODE DIAL
ROLL THE DIAL DOWN TO THE "PNL" LEGEND IN AC RANGE OF THE MODE DIAL

A/C MODE

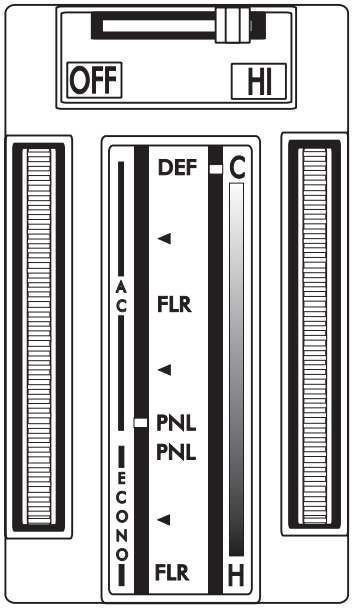

HEAT MODE

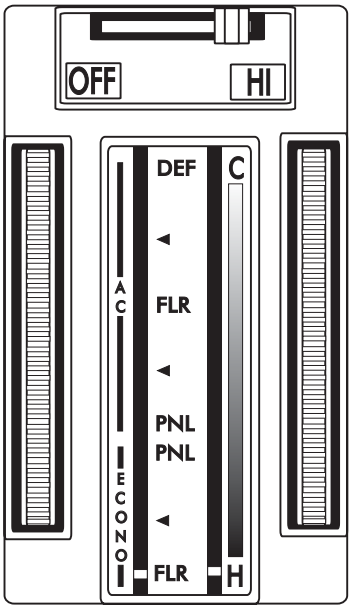

BLOWER SPEED
THIS LEVER CONTROLS THE BLOWER SPEED, FROM OFF TO HI

A/C THERMOSTAT DIAL
ROLL THE THERMOSTAT DIAL ALL THE WAY DOWN FOR MAXIMUM HEATING, ROLL THE DIAL UP TO DECREASE THE AMOUNT OF HEATINGING

MODE DIAL
ROLL THE DIAL DOWN TO THE "FLR" LEGEND IN THE ECONO RANGE OF THE MODE DIAL

DEFROST MODE

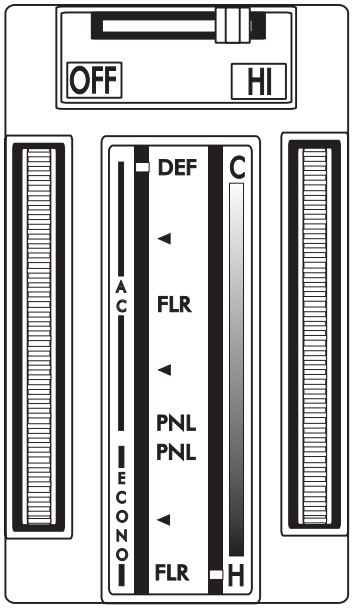

BLOWER SPEED
THIS LEVER CONTROLS THE BLOWER SPEED, FROM OFF TO HI

A/C THERMOSTAT DIAL
ROLL THE THERMOSTAT DIAL ALL THE WAY DOWN FOR MAXIMUM HEATING, ROLL THE DIAL UP TO DECREASE THE AMOUNT OF HEATINGING

MODE DIAL
ROLL THE DIAL DOWN TO THE "DEF" LEGEND IN THE AC RANGE OF THE MODE DIAL

MODE DIAL, AC & ECONO RANGES
BOTH RANGES OF THE MODE DIAL OPERATE IDENTICALLY, WITH THE SINGULAR EXPECTATION THAT THE EXTRA COOLING AVAILABLE FROM THE AC COMPRESSOR IS NOT AVAILABLE WHILE THE MODE DIAL IS IN THE ***ECONO*** RANGE. WHEN THE MODE DIAL MOVES FROM ONE MODE RANGE TO THE OTHER, THE BLOWER SPEED CHANGES FOR AN INSTANT AND RETURNS TO NORMAL. THIS BEHAVIOR IS USED TO INDICATE THAT THE OPERATOR HAS MOVED INTO THE ALTERNATE MODE RANGE.

THERMOSTAT ADJUSTMENT

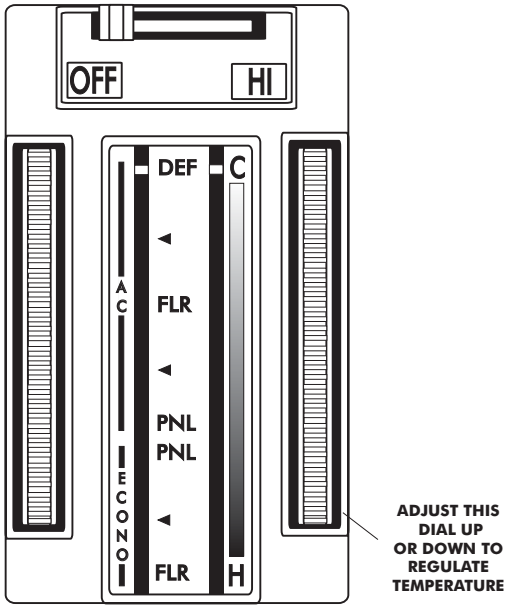

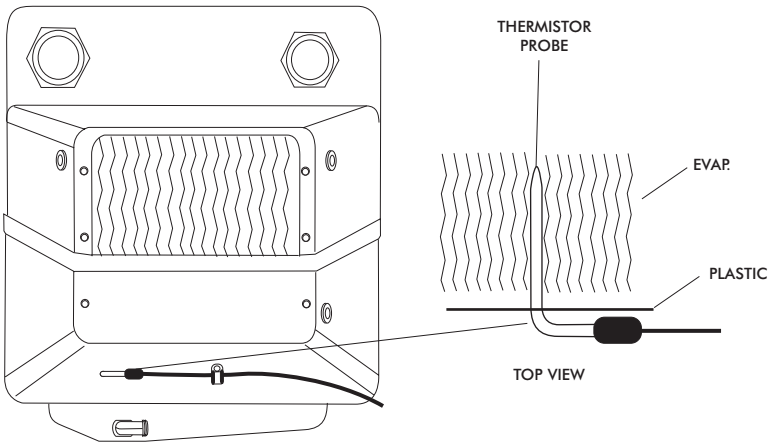

AIR CONDITIONING ADJUSTMENTS:

WHEN THE MODE DIAL IS IN THE AC RANGE, THE COMPRESSOR WILL AUTOMATICALLY CYCLE ON AND OFF SO AS TO MAKE THE AIR TEMPERATURE CORRESPOND WITH THE POSITION OF THE THERMOSTAT DIAL. AT THE UPPER-MOST END OF THE THERMOSTAT DIAL, THE COOLING EFFORT CAN BE SO INTENSE THAT UNDER HIGH HUMIDITY CONDITIONS, ICE MAY FORM ON THE EVAPORATOR COIL. THIS CONDITION KNOW AS, ICING UP OR ICE UP, CAN BE RECOGNIZED WHEN THE SYSTEM SEEMS TO BE OPERATING PROPERLY, BUT THE FLOW OF COLD AIR IS GREATLY DIMINISHED. TO COUNTER THISS EFFECT, SIMPLY BACK THE THERMOSTAT DIAL AWAY FROM ITS EXISTING POSITION SLIGHTLY, THEREBY PERMITTING THE ICE FROM THE HIGH HUMIDITY TO MELT AND NOT RE-OCCUR.

TROUBLE SHOOTING INFORMATION

SYMPTOM	SOLUTION
BLOWER STAYS ON HIGH, NO MODE FUNCTIONS	BE SURE CONTROL HEAD CONNECTOR IS PROPERLY INSTALLED
PARTIAL FUNCTION OF CONTROL HEAD. (SOME FUNCTIONS WORK)	CHECK FOR DAMAGE TO CONTROL HARNESS
COMPRESSOR DOES NOT TURN ON. (ALL OTHER FUNCTIONS WORK)	CHECK FOR PROPER CHARGE BE SURE A/C DIAL IS IN A/C RANGE
NO FUNCTION AT ALL	CHECK MAIN POWER LEAD AFTER CIRCUIT BREAKER CHECK FOR POWER WITH IGNITION ON AT PURPLE WIRE CHECK ALL GROUNDS

DEFROST DUCT TEMPLATE

☐ CUT OUT TEMPLATE AND TAPE TOGETHER AS SHOWN BELOW.

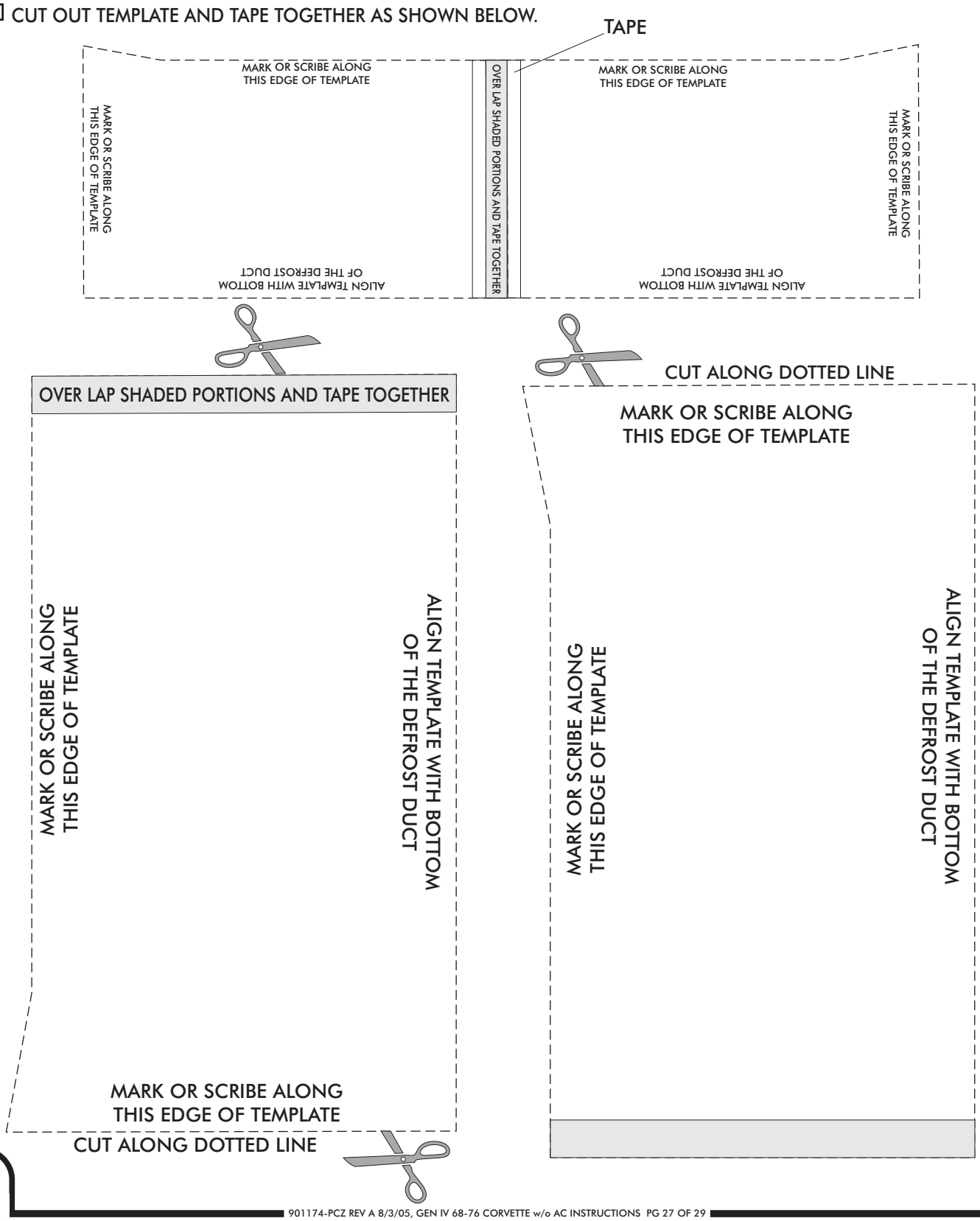

FIREWALL MODIFICATION TEMPLATE

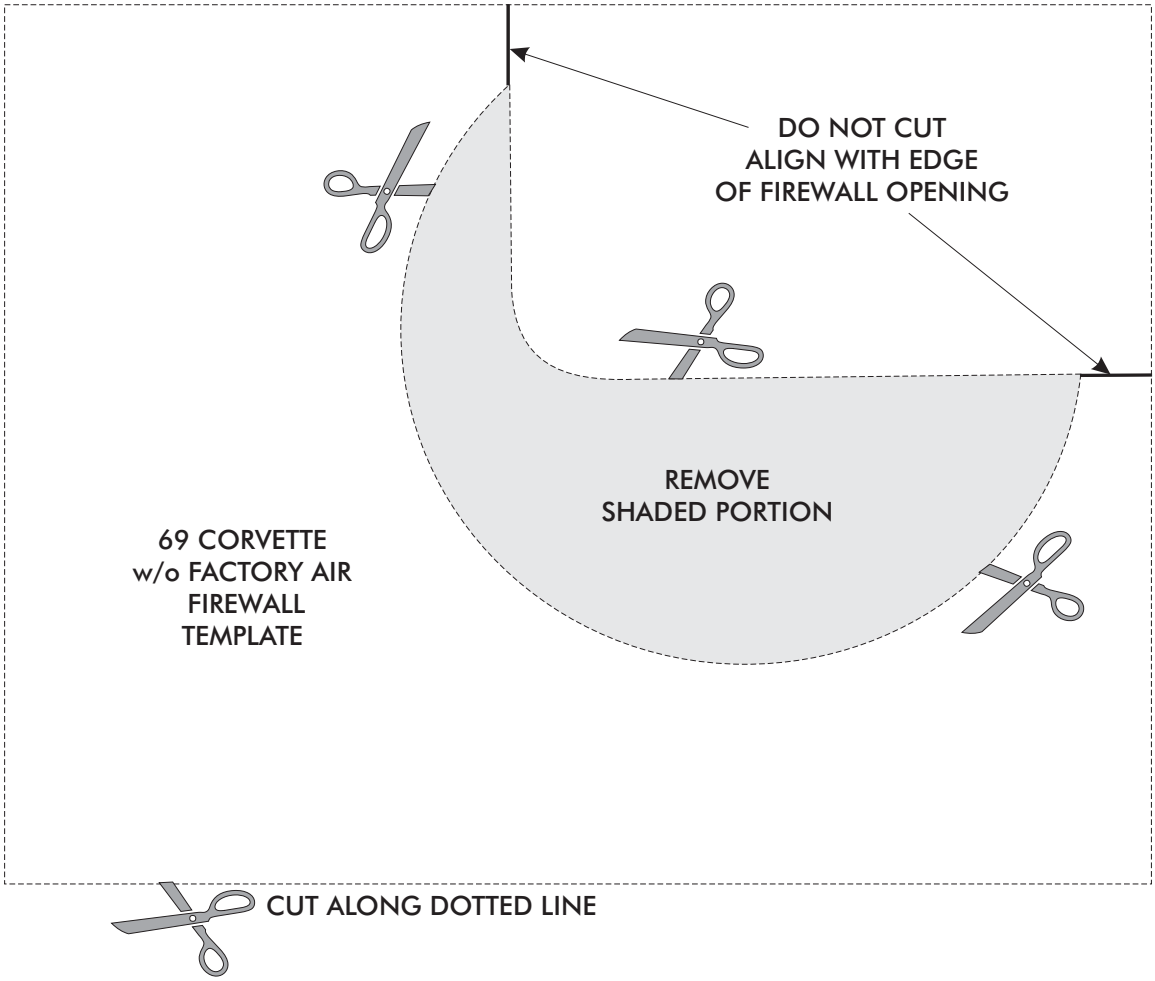

GEN IV 1968-76 CORVETTE w/o AC

EVAPORATOR KIT PACKING LIST

EVAPORATOR KIT
561174-PCZ

No.	QTY.	PART No.	DESCRIPTION	
1.	1	761174-VCE	1968-76 CORVETTE w/o AC EVAP. SUBCASE	_____
2.	1	781174-PCN	1968-76 CORVETTE w/o AC ACC. KIT	_____

CHECKED BY: _____
PACKED BY: _____
DATE: _____

①

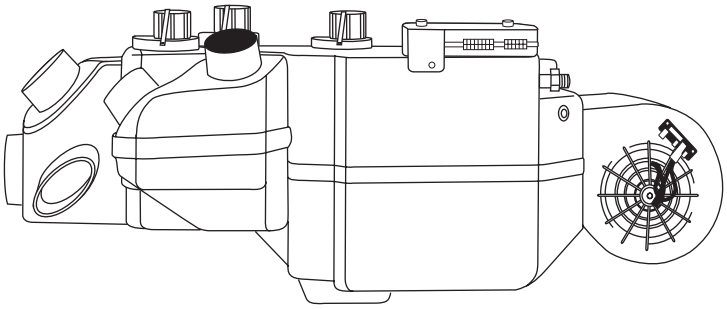

1968-76 CORVETTE
w/o AC EVAP. SUB CASE
761174-VCE

②

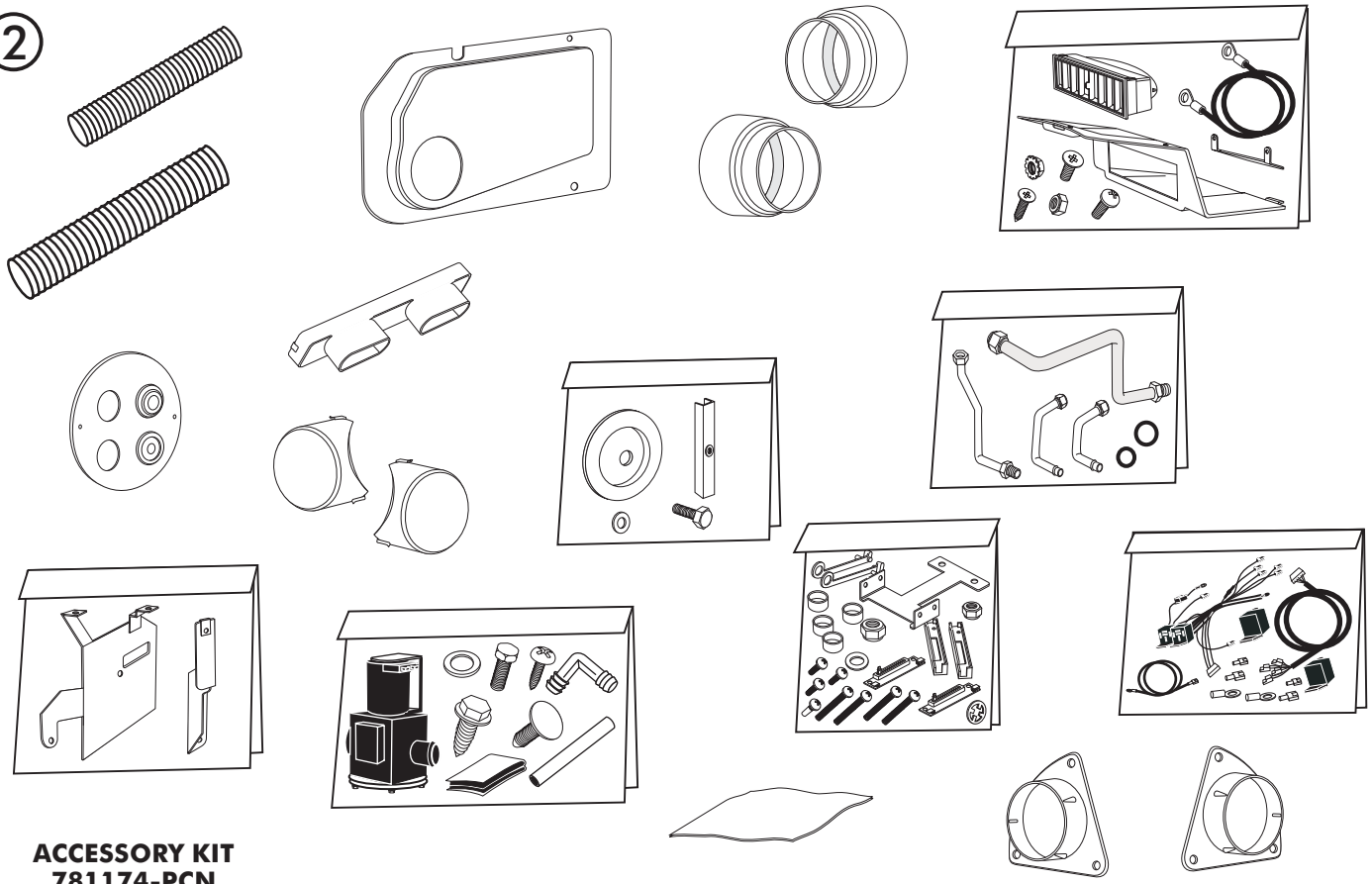

ACCESSORY KIT
781174-PCN

GEN IV 1968-76 CORVETTE w/o AC

ACCESSORY KIT PACKING LIST

ACCESSORY KIT 781174-PCN

No.	QTY.	PART No.	DESCRIPTION	
1.	2	06200-VUE	2" DUCT HOSE	_____
2.	10	06250-VUE	2 ½"DUCT HOSE	_____
3.	2	625070-CCE	1968-76 CORVETTE O.E.M. DS/PS INNER HA	_____
4.	1	625067-CCA	1968-76 CORVETTE CENTER LOUVER BEZEL w/o AC ASM	_____
5.	6	65980-VUE	"S" CLIP	_____
6.	1	625073-CCE	1968-76 CORVETTE DEF DUCT HA	_____
7.	1	627069-CCE	1968-76 CORVETTE FIREWALL COVER	_____
8.	1	627070-CCE	1968-76 CORVETTE FIREWALL COVER CAP	_____
9.	1	33137-VUI	LARGE GROMMET	_____
10.	1	33135-VUI	1 1/4" x 1" w/ 3/8" HOLE GROMMET	_____
11.	2	625071-CCE	1968-76 CORVETTE INSIDE FRESH AIR CAP	_____
12.	1	634173-PCA	1968-76 CORVETTE IK KIT	_____
13.	1	09155-PCA	HARDLINE KIT	_____
14.	1	644173-PCA	1968-76 CORVETTE EVAP BRKT KIT	_____
15.	1	640164-PCA	FRESH AIR CAP ASM	_____
16.	1	473174-PCA	1968-76 CORVETTE CNTRL PNL CONVERSION KIT	_____
17.	1	231055-PCA	GEN IV WIRING KIT	_____
18.	10	204001-TVR	VELCRO STRIP	_____
19.	1	625079-CCE	1968-76 CORVETTE O.E.M. PS OUTER HA	_____
20.	1	625080-CCE	1968-76 CORVETTE O.E.M DS OUTER HA	_____
21.	1	200915-AUR	4mil 9 x 15 POLYETHYLENE SHEET	_____

CHECKED BY: _____
PACKED BY: _____
DATE: _____